Worsted Preparing and Spinning.

BY

FRED BRADBURY.

FRANKLIN INSTITUTE
LIBRARY
The JAMES T. MORRIS
MEMORIAL
FUND

CLASS 677
BOOK B722
ACCESSION 102014

WORSTED PREPARING AND SPINNING.

PRINTED AND PUBLISHED BY
F. KING AND SONS LIMITED,
HALIFAX, ENGLAND.

WORSTED PREPARING
AND
SPINNING.

VOLUME I. (*Third Edition*).

BY

FRED BRADBURY, B.Sc., F.T.I.

PROFESSOR TEXTILE INDUSTRIES, TECHNICAL INSTITUTE, BELFAST.

AUTHOR OF "CARPET MANUFACTURE," "JACQUARD MECHANISM AND HARNESS MOUNTING," "CALCULATIONS IN YARNS AND FABRICS," "FLAX CULTURE AND PREPARATION," "WORSTED PREPARING AND SPINNING," VOL. II. AND III.

PRICE 6/6 NET.

(*Copyright*).

TO BE OBTAINED FROM

F. KING & SONS LTD., PUBLISHERS, HALIFAX, ENGLAND, AND ALL BOOKSELLERS.

CONS
TS
1627
B73
1900
V.1

PREFACE TO THIRD EDITION.

THE demand for a Third Edition of 'Worsted Spinning" is some evidence of the technical value, utility and practical advantage of the First and Second issues. Some parts of the former editions have been eliminated, others have been revised and re-written and additions have been made. Some illustrations and diagrams have been deleted and new ones added.

The subjects dealt with in this volume commence with greasy wool, and finish with the clean, prepared and carded sliver. Twenty chapters are devoted to this object.

Primarily each chapter deals fundamentally and essentially with the object to be accomplished, and the means employed to clothe these principles.

The machines designed to manipulate the wool fibres throughout the series of operations have been carefully selected, and their construction, action, object and function described.

F. B.

BELFAST.

Demy 8vo.

Carpet Manufacture.

By FRED BRADBURY.

This book contains over 300 pages of useful [illegible] invaluable information, including 243 illustrations, most[illegible] diagrams, together with half tones and coloured plates

Its numerous illustrations, general an[illegible] tion on the structures, properties and qua[illegible] ng the possibilities of colour and desi[illegible] relative durable properties, are fa[illegible] dealers and all persons who buy

THE STANDARD

OUT OF PRINT

Contains

Chapt

on

[illegible]RY

[illegible]INSTER

[illegible]HENILE, AXR.

RUGS AND SQUARES

INGRAIN, SCOTCH AND

KIDDERMINSTER.

"Textile Recorder." [illegible]though we have occasionally come across books on weaving [illegible] which certain sections have been devoted to carpet manufacture, we have never, as far as our knowledge serves us known a book which devotes the whole of its contents to this special subject. . . . The scheme of the book is decidedly good and very clear. . . . Different makes of carpet are fully described in the work, the special mechanisms employed in their production being clearly illustrated."

"The Publishers' Circular." ". . In addition to its practical value for manufacturers it will be useful to students in art schools in towns where textiles are not made. It often happens that admirable designs on paper are useless for expression in cloth simply because the artist has not understood the limits within which he must work to make his design suitable for reproduction."

F. KING & SONS, Ltd., Publishers, HALIFAX, England.

102014

The Worsted Overlooker's Handbook.

CALCULATIONS, RULES AND TABLES,
With Application of Slide Rule,

By M. M. BUCKLEY.

Eighth Edition.

Revised and re-arranged by

GEORGE LONG,

Head of Spinning Department, Shipley Technical School.

This book will serve to elucidate a few of the difficulties, and prove a useful book for reference, and for the pocket.

2/- net. Post free **2/2**
(Colonies and U.S.A. **2/3**).

Cone Drawing.

Illustrated with numerous diagrams by
M. M. BUCKLEY.

Author of "Worsted Overlookers' Handbook," &c., &c.,
Revised and re-arranged by
GEORGE LONG.

This book gives a general description of the chief types of machines and their parts, showing as far as possible how the factors are connected, and the objects of the system obtained. Attention is directed to several features of primary importance, not perhaps generally known to overlookers.

2/- net. Post free **2/2**
(Colonies and U.S.A. **2/3**).

F. KING & SONS, Ltd., Publishers, HALIFAX, England.

Crown 8vo, Cloth.

CALCULATIONS IN YARNS AND FABRICS.

Tenth Thousand. *4th Edition, Revised and Enlarged*

By FRED BRADBURY.

This book contains over 300 pages of useful, practical and technical information for

MERCHANTS, SPINNERS, MANUFACTURERS, TEXTILE WORKERS AND STUDENTS

IT CONTAINS CHAPTERS ON :—

Chap.	Subject.	Page.
i.	Various systems of counting yarns	13
ii.	Resultant and average counts	42
iii.	Relative weights and cost of twist yarns ...	62
iv.	Buying and selling flaxes	79
v.	Blending of textile fibres	87
vi.	Costing of yarns	96
vii.	Weight and cost of warp and weft yarns in commercial form	118
viii.	Winding, warping, and beaming problems ...	113
ix.	Set systems or various methods of counting reeds and healds	151
x.	Quantities and weight of warp and weft in plain and fancy fabrics	172
xi.	Weight and cost of woven fabrics	193
xii.	The construction of woven fabrics (a)	228
xiii.	The construction of woven fabrics (b)	244
xiv.	The construction of woven fabrics—angle of curvature considered (c)	260
xv.	Conditioning, or the standard allowances of moisture in textile materials	279
xvi.	Calculations involved in the analysis and reproduction of woven fabrics	292
xvii.		

The "TEXTILE MERCURY" :—

". . . The volume contains an abundance of useful information, and should be in the possession of students, teachers, managers, and all persons having to deal with the matters of which it treats."

The "MANCHESTER GUARDIAN" :—

". . . An interesting and useful chapter is devoted to the testing of textile materials and the standard allowance for moisture in each kind. . . . Mr. Bradbury's book supplies a kind of information useful to textile manufacturers which, so far as we know, has not been published in anything like the abundance presented in his "Calculations."

THOROUGHLY PRACTICAL AND UP-TO-DATE.

6/6 net. Post free **6/11**

(Colonies and U.S.A. **7/3**).

F. KING & SONS, Ltd., Publishers, HALIFAX, England.

Worsted Preparing & Spinning--Vol. 2.

Wool Combing.

By FRED BRADBURY.

CONTENTS.

Chap.	Subject.	Page
xxi.	Intermediate processes between carding and combing	273
xxii.	Wool combing	289
xxiii.	The Noble comb	302
xxiv.	The modern Noble comb	325
xxv.	Feeding the Noble comb	345
xxvi.	Dabbing mechanisms	362
xxvii.	Drawing-off mechanisms	391
xxviii.	Sliver funnels, can coiler, circle cleaning, and stop motion	412
xxix.	The set over and theory of pinning	435
xxx.	Cooper's Noble comb	452
xxxi.	The Nip or Lister comb	465
xxxii.	The Square Motion or Holden's Comb	480
xxxiii.	The Heilmann comb (Schlumberger model) ...	490
xxxiv.	Finishing gill boxes	515
xxxv.	Miscellaneous problems	532

6/6 net. Post free **6/11**

(Colonies and U.S.A. **7/3**).

F. KING & SONS, Ltd., Publishers, HALIFAX, England.

Worsted Preparing & Spinning--Vol. 3.

By FRED BRADBURY.

CONTENTS.

Chap.	Subject.	Page.
xxxvi.	Worsted drawing	549
xxxvii.	Fundamental principles of drawing and spinning	585
xxxviii.	Drawing operations and reduction calculations	604
xxxix.	Calculations on the production of drafts and twists...	627
xl.	Relative productive capacity of the drawing boxes	647
xli.	Differential bobbin winding or "cone drawing"	657
xlii.	The differential mechanisms	682
xliii.	French drawing	711
xliv.	Worsted spinning	729
xlv.	Lifter mechanism, spinning, and twisting	763
xlvi.	Worsted yarn calculations...	790
xlvii.	Automatic doffers	798
xlviii.	Worsted mule spinning	830
xlix.	Twisting	839
l.	Warping and supplementary processes	850

7/6 net. Post free **8/-**

(Colonies and U.S.A. **8/3**)

F. KING & SONS, Ltd., Publishers, HALIFAX, England.

Worsted Spinning Economics.

BY

H. KING.

First Class Honours, City and Guilds, London.
Formerly Lecturer and Demonstrator on
Worsted Combing, Spinning, &c.
Halifax and Bradford
Technical Colleges.

12/6 NETT.

CONTENTS.

Efficiency Essential
Factory Organisation
Qualifications Required
Sequence of Costing
Production
Constitution of Plant
Overhead Expenses
Production and Labour Costs
Determining the Actual Conversion Costs
Calculated Selling Price per lb.
Productive Costs Influenced by Hours Worked
Definition of Factory Charges
Maximum Productions
Spinning and Twisting—Maximum Production
Production Efficiency
Payment by Results
Condition
Roller Covering
"Wastes"

F. KING & SONS, Ltd., Publishers, Halifax, England.

CONTENTS.

PART I.

Raw Materials, Varieties and Properties.

CHAPTER I. 1—18

Varieties of Sheep and Sources of Supply.

1. Origin of domestic varieties. 2. Area of distribution. 3. Classification of Sheep. 4. British Sheep. 5. Australian Sheep. 6. New Zealand Sheep. 7. African Sheep. 8. South American Sheep. 9. Indian Sheep. 10. Mohair Goat. 11. Classification and distinguishing marks. 12. Greasy, washed, scoured, slipe, pulled and fallen wools. 13. Botany, Crossbred and Lustre Wools. 14. Baled Wools for Transport and Storage. 15. Auction Sales. 16. Conditions of Sale. 17. Relative Wool Values. 18. Suitability of different wools for specific types of woven and knitted fabrics.

CHAPTER II. 19—28

Influence of Climate and Pasture.

19. Temperature and its Influence. 20. Relative Influences of Temperature, Skin and Blood. 21. Rainfall and its Influence. 22. Humidity a modifier of Rainfall. 23. Soil and Pasture. 24. Influence of altitude and contour.

CHAPTER III. 29—38

Impurities in Wool.

25. Two classes of Impurities. 26. Percentage of Impurities. 27. Foreign Impurities. 28. Natural Impurities.—Yolk. 29. Relation of Secretive Glands to Fibre. 30. Chemical Composition of Yolk. 31. Cholesterol and its commercial uses. 32. Removal and addition of Impurities.

CHAPTER IV. 39—45
INFLEUNCE OF CHEMICAL RE-AGENTS.

33. General Analysis of Wool. 34. Action of Alkalies. 35. Action of Chlorine. 36. Action of Hydrochloric and Sulphuric Acids. 37 Action of Nitric Acid and various Chemical Re-agents. 38. Hygroscopicity of Wool.

CHAPTER V. 46—56
THE PHYSICAL STRUCTURE OF THE WOOL FIBRE.

39. The Wool Fibre—Medulla Cells. 40. Cortical Cells. 41. Cutical Cells. 42. Structural Variations—Kempy Fibres. 43. Complex Cellular Structure of the Wool Fibre. 44. Length and Fineness of Wool Fibres.

CHAPTER VI. 57—88
PHYSICAL PROPERTIES OF THE WOOL FIBRE AND INFLUENCE OF STRUCTURE.

45. Characteristic Spinning Properties of Different Wools. 46. Moisture in Wool and its General Influence. 47. Moisture—Its Influence on Cellular Structure and Commercial Value of Wool. 48. Felting Properties. 49. Felting and Moisture. 50. Felting and Fibre Structure. 51. Felting Retardation and Thickening of Cell Walls. 52. Felting and Kempy Fibre. 53. Felting and Medulla Cells. 54. Felting and Yarn Characteristics. 55. Felting Accelerators. 56. Felting, Illustrative Examples. 57. Felting, Summary of Conclusions.

PART II.
CLASSIFICATION, WASHING AND DRYING.

CHAPTER VII. 89—96
CLASSIFICATION OF WOOL.

58. Saxony and Silesia. 59. Australian Wools. 60. Cape. 61. Natural Coloured Wools. 62. American Wools. 63. Mohair, Alpaca, &c. 64. English, Scotch, Welsh and Irish Wools. 65. Typical Wool Varieties Illustrated.

CHAPTER VIII. 97—104

WOOL SORTING.

66. Qualities of Wool in a Single Fleece. 67. Wool Sorting operation. 68. Denomination of Qualities of Sorted Fleece. 69. Spinning Capacities. 70. Graphic Division of Fleece into its possible Qualities. 71. Difference of Fibre in same Fleece.

CHAPTER IX. 105—115

WOOL SCOURING AND WASHING.

72. Object of Wool Washing. 73. Suint and De-Suinting. 74. Wool Scouring. 75. Water and its Impurities. 76. Detergents. 77. Action of Soda on the Wool Fibre. 78. Soap Recipes. 79. Analysis of Soap. 80. Temperature of the Scouring Solution.

CHAPTER X. 116—150

WOOL WASHING MACHINERY AND PROCESSES.

81. Hand Washing. 82. Modern Washing Machines. 83. McNaught's Harrow Type Wool Washing Machine. 84. McNaught's Swing Rake Type of Washing Machine. 85. Squeezing Rollers and Pressure of Same. 86. Action of Lattice Feed and Swing Rakes. 87. Petrie's Rake Scouring Machine. 88. Petrie s Type with Spring Compression. 89. Petrie's "Harrow" Type of Wool Scouring Machine. 90. Petrie's Automatic Self Cleansing Wool Washing Machine. 91. Alkaline Scouring. 92. Volatile Solvents. 93. Comparisons.

CHAPTER XI. 151—166

WOOL DRYING.

94. The science of Wool Drying. 95. Drying Tests—Research Results. 96. The Hydro Extractor. 97. The Table Dryer. 98. Petrie's and McNaught's. 99. Textile Conveyor. 100. Principle and processing characteristics.

CHAPTER XII. 167—171

Worsted and Woollen Yarns : a Comparison.

101. Wool suitable for Worsted or Woollen Yarns. 102. Structural differences between Worsted and Woollen Yarns. 103. Types of Cloth for which Worsted and Woollen Yarns are most suitable. 104. Differences of manipulation of Wool into Worsted or Woollen Yarn. 105. Illustrative differences between Worsted and Woollen Yarns.

PART III.

Worsted Preparing.

CHAPTER XIII. 172—179

Gilling or Long Wool Preparing.

106. Different Systems of Preparing Wool for Worsted Yarns. 107. Gilling Machine Mechanism. 108. Plan of Rollers, Screws and Gearing Details of Gill Box. 109. Gill Box—Sectional Elevation of Rollers and Fallers. 110. Process of Gilling. 111. Setting of machine. 112. Function and Importance of Fallers.

CHAPTER XIV. 180—197

Drafting in Gill Boxes.

113. Draft. 114. Suitable Drafts. 115. Calculating the Draft. 116. Gauge Point. 117. Drafting Example—Total Draft. 118. Alternative Solution to 117. 119. Draft. 120. Exercises on Drafting. 121. Summary of Gilling and Drafting. 122. Knocking-off Motion. 123. Calculations on " turn-off " in Gill Boxes. 124. Fluted Rollers.

CHAPTER XV. 198—208

Double or Two-Screw Gill Boxes.

125. Efforts to Reduce Breakages of Wool Fibres. 126. Double Threaded Screws. 127. The Expanding Screws. 128. Double Screw Gill Boxes—Calculation of Drafts. 129. Details of Double Screw Gill Boxes. 130. Drafting Examples.

CHAPTER XVI. 209—218

Oiling Wool.

131. Object of Oiling Wool. 132. Suitable Oils—Gallipoli. 133. Oeline Oil. 134. Oil Emulsions. 135. Wool Lubricant Mechanisms. 136. Oiling Carded Wools. 137. Proposed Standard Allowance of Oil. 138. Dry Spun Yarns.

PART IV.

Worsted Carding or Short Wool Preparing.

CHAPTER XVII 219—228

Opening Processes and Removal of Loose and Vegetable Impurities.

139. Object of Carding for Worsted. 139a. Cots and their Removal. 140. The Double Swift Willey. 141 Process of Opening. 142. Burrs and Burring. 143. The Burring Machine. 144. Operation of Burring. 145. Burring Accessories to Carding Machine. 146. Carbonising or Extracting. 147. Twaddle Degrees. 148. Carbonising Process.

CHAPTER XVIII. 229—241

OBJECT AND PROCESS OF WORSTED CARDING.

149. General purpose of Worsted Carding. 150. The Worsted Card—General Details. 151. Automatic Feeding. 152. Sizes of the various Rollers. 153. Driving the Card Rollers. 154. Formula for Calculating Speeds of Card Rollers. 155. Principle of Carding.

CHAPTER XIX. 242—254

CARD CLOTHING.

156. Forms of Card Clothing. 157. Clothing Foundation. 158. Card Wires. 159. Carding Properties of Different Card Teeth. 160. Setting Wires in Clothing. 161. Card Clothing Calculations. 162. Clothing for Worsted Card. 163. Clothing for the Opening Rollers. 164. Neps, Lumps or Motes.

CHAPTER XX. 255—267

SETTING, SPEED, FUNCTIONS AND GRINDING OF THE VARIOUS CARD ROLLERS.

165. Setting the Rollers. 166. Relative Speeds of the different Rollers. 167. Functions of the Card Rollers. 168. Grinding.

PART I.

RAW MATERIALS, VARIETIES AND PROPERTIES.

CHAPTER I.

VARIETIES OF SHEEP AND SOURCES OF SUPPLY.

1. *Origin of domestic varieties.* 2. *Area of distribution.* 3. *Classification of Sheep.* 4. *British Sheep.* 5. *Australian Sheep.* 6. *New Zealand Sheep.* 7. *African Sheep.* 8. *South American Sheep.* 9. *Indian Sheep.* 10. *Mohair Goat.* 11. *Classification and distinguishing marks.* 12. *Greasy, washed, scoured, slipe, pulled and fallen wools.* 13. *Botany, Crossbred and Lustre Wools.* 14. *Baled Wools for Transport and Storage.* 15. *Auction Sales.* 16. *Conditions of Sale.* 17. *Relative Wool Values.* 18. *Suitability of different wools for specific types of woven and knitted fabrics.* 19. *British Imports and Re-Exports.*

1. Origin of domestic varieties. WOOL is the general term used to distinguish the fibrous covering obtained from the different varieties of sheep and allied animals, which are found either wild, or domesticated in various parts of the world. They occur chiefly between the latitudes 60° N. and 60° S., and are indigenous to mountainous regions. Sheep

belong to the natural order Bovine of the mammalia Genus Ovis. The origin of the domestic varieties is very obscure and a matter of conjecture ; from the very earliest times sheep have been associated with man, and undoubtedly provided him with food and clothing. Many authorities support the view that it has descended by a long series of variations and modifications from wild ancestors which inhabited the mountainous parts of Asia, such as the Argali or Musmon, with which it has several affinities. It seems, however, probable from a study of all the structural peculiarities, that these, together with the sheep, had their origin in a common source, and that as man became more settled in his disposition, his attention would be directed toward the improvement of his flocks so as to increase their utility, and which may, to a great extent, account for the present existence of many varieties. This would also produce a great change in their essential features since the climate and surroundings would exercise some influence. Few animals manifest a greater tendency to vary than sheep, and this enables it to become readily acclimatised to widely different conditions which have their effect on the wool produced :—

2. Area of distribution. The sheep is found distributed more or less in all the countries forming the temperate zones. The area, therefore, from which wool si obtained is very extensive and varied, bounded on the north by Iceland, and on the south by the Falkland Islands and Patagonia. The southern zone which embraces Australasia, Cape Colony and the Argentine Republic, furnishes the greater portion of fine wools. The climatic conditions, as well as the nature of the countries, are peculiarly suitable for the growth of a superior quality. The northern zone may be conveniently divided into two parts, the eastern portion comprising the following and surrounding countries :—

Turkey, Persia, Egypt, Afghanistan, Northern India, Thibet and China, which are characterised by the low type of wool which they produce. The western portion of the zone embracing Europe, Great Britain and remaining countries yields wool of a medium quality. The number of sheep is always a very variable factor fluctuating first in one direction and then in the other. According to the statistics for 1913 there were about 626,000,000 in the chief countries of the world. During the pre-war years a uniform decrease was recorded in Europe ; there were in 1912 about 170,000,000 compared with 215,000,000 previously. The United States in 1885 had over 50,000,000, while in 1898 it fell to 39,000,000. Germany in 1873 had nearly 25,000,000, in 1897 only 10,800,000. In Australia particularly, the number of sheep is very variable owing to the prevalence of protracted periods of drought which sometimes causes millions to die off. In 1913 there were about 117 million sheep in Australia and New Zealand. The net decrease in the number of sheep at the end of the war was about 12 to 15 per cent. No reliable figures are however obtainable.

3. Classification of Sheep. Some naturalists only recognise three distinct kinds of sheep. (1). The Argali, *ovis ammon*, the wild sheep found in Asia and America. (2) The Musmon or Moufflon *ovis musmon* peculiar to southern Europe and the north of Africa. (3) The Domestic Sheep *ovis aries* which has a very wide distribution and is found in almost all civilised countries. Prof. Archer however enumerates 32 varieties 4 of which occur in Europe, 15 in Asia, 11 in Africa, and 2 in America.

EUROPE :—

The Spanish Merino	...	*Ovis hispanium.*
,, Commom Sheep	...	*O. rusticus.*
,, Cretan Sheep	...	*O. strepsiceros.*
,, Crimean Sheep	...	*O. longicaudatus.*

ASIA :—

Hooniah, or Black-faced Sheep of Thibet.
Cago, or Tame Sheep of Cabul ... *O. cagia.*
Nepaul Sheep ... *O. Selinga.*
Curumbar, or Mysore Sheep.
Garar, Indian Sheep.
Dukhun, or Deccan Sheep.
Morvant de la Chini, or Chinese Sheep.
Shaymbliar.
Broad-tailed Sheep ... *O. laticaudatus.*
Pucha, or Hindustan Dumba Sheep.
The Tartary Sheep.
,, Javanese Sheep.
,, Barwell Sheep ... ... *O. Barual.*
,, Short-tailed Sheep of Northern Russia.

AFRICA :—

The Smooth-haired Sheep ... *O. Ethiopia.*
,, African Sheep ... ... *O. Guinensis.*
,, Guinea ,, *O. Ammon. Guinensis.*
,, Zeylen ,,
,, Fessan ,,
The Congo Sheep ... *O. aries Congensis.*
,, Angola ,, ... *O. Angolensis.*
,, Yenu, or Goitered Sheep *O. aries steatiniora*
,, Madagascar Sheep.
,, Bearded Sheep of West Africa.
,, Morocco Sheep ... *O. aries Numedæ.*

AMERICA :—

West Indian Sheep, found in Jamaica.
Brazilian Sheep.

4. British Sheep. Great Britain has a number of distinct varieties of sheep which may conveniently be divided into three groups. (*a*) The long wool or lustre and demilustre, such as the Lincoln, Leicester,

Yorkshire and North, Devon, Gloucester or Cotswolds. (*b*) The short wools, such as the South Downs, Oxford, Suffolk, Hampshire Downs, Somerset and Shropshire. (*c*) The Mountain breeds, embracing Cheviot, Black-faced Mountain Herdwick, Lonk, Welsh and Limestone. Britain contains more varieties (about 26) than any other country, and by far the greater portion of the sheep are representatives of pure breeds. Many of these have been crossed to produce an animal for some special purpose or suitable for a particular locality. Some of the pure breeds have a somewhat general distribution, for example, the Shropshires are found in many places in England, while there are many flocks both in Scotland and Ireland. The Southdown occurs both in Cambridgeshire and Norfolk, and some good flocks of Cotswold, which are long wools, occur in the latter country also. The Lincoln sheep is confined chiefly to Lincolnshire, though it is also found in some of the adjoining countries. In some parts of East Yorkshire, Notts., Rutland, Derbyshire, Hants., Leicestershire and Northampton, the Leicester is the chief variety. In Gloucestershire we have the Cotswolds, which are also found in some parts of Herefordshire, Monmouthshire and Oxfordshire. The Wensleydales in North Yorkshire, parts of Cumberland and Westmoreland, the Devons in Devonshire, the Romney Marsh in Kent. The South Down is found in Sussex, Surrey and portions of Kent; while in Oxfordshire, Bucks., Bedfordshire, Herts., and Berks., the Oxford Down predominates. In Hampshire and Wiltshire the Hampshire Down is the principal breed, while over the West Midland the Shropshires are distributed; Suffolk occur in Suffolk, Norfolk and Essex. On the hills of Derbyshire, the Yorkshire Moors, Durham, and in Scotland, the Black-face are plentiful; the Herdwicks principally on Cumberland and Westmoreland hills; in hilly parts of Yorkshire and Lancashire we have the Limestone sheep. Cheviots and Border Leicesters are

the chief varieties found in the South of Scotland, Northumberland and portions of Cumberland. For crossing with the Merino, the Lincolns and Leicesters have been exported to Australia, New Zealand, Cape Colony and the Argentine Republic, where they hold a very high reputation. Pure flocks of these breeds, as well as Shropshires and South Downs, are also extensively cultivated. Ireland has only one native breed, the Roscommon, a heavy long-wooled variety, but flocks chiefly of Leicesters, Shropshires and Lincolns, and their crosses are distributed over the country. Upon the Welsh Mountains two varieties are found, one peculiar to the uplands, the other confined more to the valleys.

5. Australian Sheep. The wools from Australasia, Argentine Republic, Falkland Islands and Punta Arenas are classed as "wools of merino blood, immediate or remote," although there is now a much larger proportion of English blood wool grown in these countries than formerly. English sheep of Lincoln and Leicester type have been sent to these countries to cross with the merino sheep for the purpose of securing a crossbred wool of long staple and lustrous fibre which will partake of the peculiar qualities of English wool and retain the softness, delicacy and working properties of the Australasian merinos and the French or Rambouillet sheep of Buenos Ayres for manufacturing purposes.

Falkland Island wools are now largely of the Lincoln blood crossed with Buenos Ayres. Punta Arenas sheep are the overflow of Falkland Islands and are crossed with French merino sheep of Buenos Ayres. Their wool is sold in London unwashed.

Among the wool-producing countries of the world, Australia occupies the premier position, both for quality and quantity. Although possessing no indigenous breeds, its vast resources of natural pastures, combined

with the suitability of its climate and general conditions, render it particularly suitable for wool growing, and most of the leading varieties of sheep are now very successfully reared. Its fine wools of the Merino type are unequalled, while the longer and stronger varieties are of the best class. The South, East and Western portions of the continent constitute the principal growing area, comprising parts of Victoria, New South Wales, Queensland, South and West Australia, the chief ports of shipment being Melbourne, Sydney, Brisbane and Adelaide. In Victoria, the western and south-western districts constitute the principal growing parts; in New South Wales, the northern portion and Riverina district; Queensland, the central and southern parts, while in South Australia, the south-eastern portion forms the chief area. The wools from Victoria are remarkable for their excellence, and the Port Philip Merinos have for a long time occupied the foremost place on account of the superior quality. They possess all the features required in a wool of the very best type, fineness of fibre, length of staple, softness, lustre, good colour, regular in growth, comparatively clean, giving excellent results on scouring they are used for making yarns of the highest class. In the moist coast districts, crossbred and Lincoln wools of a very high standard are grown. For quantity of wool produced, New South Wales ranks first among the Australian colonies. Sydney wools are always in great demand for the making of fine yarns. They lack the lustre of the Victorian wools, but are equal to them in fineness, slightly longer, though not quite as clean or pure in colour, they possess a very soft handle and are very pliable. The Adelaide or South Australian wools are inferior to either the Port Philip or Sydney, they have not the lustre nor softness and are coarser in the hair as well as harsher to the handle, they have a peculiar red tint, due to the presence of sand in the fleece. Fairly ne fine the fibre and of good length and colour, they are very useful wools,

though deceptive with reference to their probable yield of clean wool after scouring.

The wool from Queensland, like New South Wales, is almost all of the fine Merino character, in fact, many of the so-called Sydney brands have been grown in Queensland, there being a certain degree of similarity between the two. They are fine in the fibre, of fair length and good colour. Though somewhat inferior to the typical Sydney and Port Philip, still a large quantity is used in the manufacture of fine goods. West Australian or Swan River wool as it is termed, though fine, is short and dirty, lacking in style, and has to be frequently mixed with longer wools to obtain the requisite strength.

6. New Zealand Sheep. In New Zealand the wool grown is now chiefly of a medium quality—crossbred —though formerly large quantities of very good merino were exported. The climate being somewhat similar to England, it is very suitable for the stronger varieties. By crossing the merino with the long wool Leicester and Lincoln to increase the weight of the sheep for the frozen mutton trade, the farmers have at the same time completely altered the quality of the fleece, which is both coarser, heavier and brighter, and is used for many purposes instead of some of the English wools.

7. African Sheep. Wools from North Africa are a cross of the Barberry sheep with the Spanish and French Merino. In Benghazi the wool is coarse and shows little trace of Merino. Westwards towards Morocco the wools are finer. Wools of Algeria, Tunis, Tripoli show more of the merino type. In Morocco are found the finest and they are much better bred wools than those of Algeria, Tunis and Tripoli.

Wools take their names from the cities or provinces whence shipped.

Aboudhia wool means the finest quality of long staple suitable to comb.

Beldia wool means second quality of long staple suitable to comb.

Urdigria wool, the fine quality of short or clothing wool.

The sheep of Egypt are the fat tailed and fat rump breeds. There are no pastures, the sheep being fed each day upon straw and clover chopped and in the dry season on chopped straw. The best wool comes from Upper Egypt, the poorest from Lower Egypt. The sheep are first washed, allowed to dry and shorn, when it is sometimes further washed. It is then sorted, picked over, beaten with sticks and packed.

The whole of South Africa is more or less of a wool-growing country. The Great and Northern Karoo, with the districts to the north and east, form the principal area, though the south and south-western parts of Cape Colony also produce wool of a very good quality. Merinos and the native Cape sheep are the chief varieties reared. The wool-growing districts may be grouped under two heads, 1st, the Karoo, an extensive elevated plateau, with an average elevation of 3,000 feet, which, as its name signifies, is remarkable for the dryness of its climate, and the parched, arid character of its soil composed principally of sand and shale. The vegation is scanty, being chiefly of a shrubby nature, rain seldom falls, and the wool acquires a yellowish tinge. 2nd, the grass districts which extend along the north, south and eastern sides of the Karoo. They have a heavier rainfall and possess excellent pasturage, the wool grown is of very good colour. Relatively they are inferior to the better wools of Australia, being rather coarser in the fibre, shorter in length, and slightly sharper to the handle.

8. South American Sheep. South America supplies a range of different types of wool. From the vast tracts of low-lying land in the neighbourhood of the River Plate we obtain wool of a Merino character, such as Buenos Ayres and Monte Videan, as well as a large quantity of crossbreds. They are very dirty, and contain large quantities of vegetable matter such as fruits and seeds, whose presence reduces the value. Though fine in the fibre, they are short, sharp to the handle, and when compared with the Australian types lack that strength, softness and elasticity which are the attributes of a superior wool. Of average quality, they are largely used on the continent in the manufacture of worsted yarns, while in Bradford they are frequently mixed with the better classes to produce a cheaper blend.

9. Indian Sheep. Sheep from India belong to the fat tailed variety—they have long pendant ears and coarse wool, they are shorn twice each year, in March or April and October or November. Wools shipped from Afghanistan and Beloochistan known as Kandahar and Kelat wools respectively are sent by rail and caravan to Karrachi or Bombay. Joria and Vicaneer wools come from Rajputana to Kurrachi and Bombay. It is usually in twisted fleeces, these are opened and dusted, sorted by colours and qualities, sometimes washed, cleaned by ginning or beating with sticks and press packed from the above ports as East India wool.

The spring clip is always the whitest. That which is shorn in October or November becomes yellow from the excessive rains in June, July and August.

10. Mohair Goat. The Angora, or Mohair goat, approaches nearer to the sheep both in appearance and habits than any other, its flesh closely resembles mutton. It is a

native of the province of Angora in Asia Minor and is less addicted to browsing on shrubs and foliage than the common goat, preferring pasture and being of a less wandering disposition it is easier kept. It is a delicate animal. Flocks are kept from degenerating by crossing pure blood rams on the common Kurd goats. The hair unless shorn falls annually about April or May. Beneath this long curly fleece and close to the skin is a short undergrowth of hair of a permanent character not coming off when the outer fleece falls. In shearing this is removed with the fleece and the process of combing leaves the short hairs, which are of little value, in the noil. In the fleece of the cashmere goat the short undergrowth is the most valuable and the long hairs are of no value, being combed for the purpose of taking out the long hairs and leaving the noil as the best part.

Angora goats do not thrive in Europe. Several attempts have been made to breed them in England but without success. They can stand cold but must have a dry climate, that in England is too moist and the hair rapidly degenerates. In 1838 they were introduced into South Africa where the dry climate seems to suit them very well. In Turkey the mohair is purchased by the merchants and afterwards sorted in the warehouses into about four classes called whites, yellows, colours and inferiors. The "whites" are not washed but packed straightway into sacks ready for exporting at the most favourable time. The "yellows" are sent to the nearest river to be washed. The other two sorts are not.

The wool from the Angora sheep is far from attaining any special quality. Most of it is known to commerce by the name of "Vakit" which represents the annual spring clip of sheep, a small quantity is the autumn clip of lambs called "Guz Yougnou." 90% of the total amount is white, remainder dark.

11. Classification and distinguishing Marks. Sheep are usually shorn once a year, either by hand, with a pair of shears, or by machinery. In some cases the shearing is done at intervals of 6 months, the result being that the staple is very short, while the frequency of the operation causes the fibre to become coarser. One of the chief features of the Colonial wools is the system of classification which has been adopted. The belly wool is first removed, and if full of impurities is kept separate, the remainder of the fleece is next shorn and afterwards skirted, *i.e.*, the edges or low parts taken off, these being usually divided into two qualities; if the necks are bad, they are packed separately; sometimes the backs are taken out also, if very sandy, the remainder is then rolled up and classed, length and fineness being taken into consideration. Before commencing another sheep all the locks and loose bits are swept up, these being also kept to themselves. The amount of skirting taken off depends upon the condition of the fleece, the matted, stained and seedy parts being removed. The wool classer first groups the fleeces into two piles, *clothing*, *i.e.*, those suitable for carding, and *combing* wools adapted for Worsted Spinning, these are purely arbitrary terms since many clothing are combed, and some of the combing are carded. Wools are generally distinguished or named from the port whence they are shipped, the district or country where they are grown, or the name of the breed of sheep; thus Australia gives us the Port Philip, Sydney, Queensland, Adelaide and Swan River. New Zealand—wools of that name; South Africa—the Cape wools; South America—the Buenos Ayres and Monte Videan wools. Great Britain furnishes the South Down, Shropshire, Lincoln, Yorkshire, Cheviot and Mountain wools. The East Indian embraces such wools as Joria Vicaneer, Candahar Bagdad, Kassapbatchi and others, all of which are of low quality. Almost each grower or station marks the bales with a distinctive brand, so that they may be

identified by the buyers at the sales. Sales are periodically held at the shipping ports such as Melbourne, Sydney, Brisbane, Port Elizabeth, etc., a large quantity of the Colonial wools being also forwarded to London for the auction sales held there. The East Indian and some of the South American and fine wools are chiefly dealt with in Liverpool, while the bulk of the South American is sent to the continental centres, such as Antwerp, Roubaix, Havre. British and Irish Wools are sold principally at the fairs, held at the chief towns in the growing districts, or the buyers go round to the farmers purchasing if terms can be arranged.

12. Greasy, Washed, Scoured, slipe, pulled and fallen wools. When the wool contains all the impurities it has collected during growth, it is termed *greasy*, if a short time before shearing the sheep has been washed, either in the streams or special tanks, to remove some of the grease and dirt, it is called *washed wool*, or after shearing or classing the wool may be cleansed by washing machines, when it is known as *scoured*. In addition to these we have *Slipe* or *Flipe*, wool that has been removed from the sheep which have been slaughtered, *Skin* or *pulled* wool when the skin has been treated with lime or acids to loosen the fibres so that they can be readily removed and leave the skin clean and free: *Dead* or *fallen* wool has been taken from sheep which have died, may be from disease or starvation, it is tender and sometimes contains germs of disease.

13. Botany, Crossbred and Lustre Wools. In Worsted Yarn Manufacture, the wools used are generally termed *Botany*, *i.e.*, Merino wool, comprising the short soft varieties obtained from Australia, New Zealand, South Africa and South America; *Crossbred*, *i.e.*, wool derived from sheep produced by crossing the heavy long wool Lincoln or Leicester, with the fine Merino. New Zealand, South America and Australia are the principal

sources of supply, and English wool, the wools of Britain, such as the lustre and demilustres.

14. Baled Wools for Transport and Storage. For convenience in transport and storage, the imported wools are packed in bales, and the home-grown wools in sheets, which vary both in size and weight. In Colonial bales the wrapping usually weighs from 10 to 12 lbs., sometimes very great pressure is used in packing the bale which is then bound with iron bands, so that they occupy less space and are more convenient to handle, these are termed *dumped* bales, and are about 4ft. 6in., or 5ft. 3in long, by 2ft. 2in. in width and depth.

The average weights are for

Australian		350 lbs.
New South Wales	greasy	400 lbs.
,, ,,	scoured	260 lbs.
Cape		400 lbs.
Cordooa		1000 lbs.
Monte Videan		1000 lbs.
River Plate		800 lbs.
East Indian		350 lbs.

Each bale is marked with the brand or mark of the grower, the class of the wool, and the weight. Home wools are packed in large sheets, which average about 250 lbs. Colonial and foreign wools generally are sold per lb., but in the case of our native wools, different districts have their own basis, in some it is price per lb., in others per stone of 14 lbs., while others per tod of 28 lbs.

15. Auction Sales. The most important auction sales are those held in London. On arrival, the wool is stored in the warehouses, the lots being arranged in tiers of 3 or 4 bales high, to await the sales which are

fixed by the Wool Brokers' Association. These usually take place at intervals of about two months, viz., January, March, May, July, September and November. Catalogues are issued showing place of storage, the brand and character of the wool, number of bales and tare, and in most cases the port of shipment and name of vessel. During the sale (which may last from 2 to 4 weeks, according to the quantity of wool on offer), the buyers go round the warehouses each morning to select and value the bales which suit their requirements ready for the evening sale.

16. Conditions of Sale.

(*a*) The highest bidder to be the purchaser, and if any dispute arise between the bidders for any lot, it shall be decided by the broker, unless one of the claimants will advance ; in that case the Lot shall be put up again.

(*b*) The Goods to be weighed off by the Warehouse-keepers, and taken away by the buyers at their own expense within fourteen days with all faults and defects of whatever kind (including defect or error of description). One Invoice to be rendered to each buyer for the whole amount of his purchases and delivery to be given not later than the seventh day after the day of Sale upon payment of the invoice in full or if the same be not then ready of an estimated equivalent sum in Cash or Bank of England Notes without Discount.

(*c*) The Goods to be free of Rent and at the risk of the Venders from Fire without reference to any payment which may have been made by the Buyer to the Brokers until Six o'clock p.m. of the third day (from the expiration of the prompt) unless delivered from the Warehouses or transferred for rehousing in the books of the Warehouse-keeper.

(*d*) The Buyers to pay the Broker a small fixed sum per Lot and to deposit £25 per cent. (if required) at any time during or after the Sale.

(*e*) And if any Lot or Lots remain uncleared after the expiration of the said 14 days, the before-mentioned Deposit to be absolutely forfeited, and the buyer to be further subject to all loss and charges that may accrue on the re-sale thereon, which it shall be at the option of the Brokers to effect either by public sale or private contract.

(*f*) If the weighing, delivery, or receipt of any Lot shall be delayed or prevented by reason of a general or partial strike of workmen, the respective periods under these conditions for weighing, delivery, and receipt of and payment for, the goods shall be proportionately extended for such period as may be necessary, not exceeding the 28th day from the date of sale. If at the expiration of such 28th day, the weighing, delivery, or receipt of the goods is, and shall have been, prevented by any such strike, the contract of sale shall as respects undelivered goods be annulled ; and all payments (if any) made by the buyer for such undelivered goods shall be repaid to him. If, however, a Delivery Order shall for 72 hours (exclusive of Sundays or Bank or Public Holidays) have been in the possession of the buyer or his agent, delivery as between buyer and Seller shall be deemed complete. If delivery shall, from the causes specified in this condition, be delayed or prevented, the charges on the undelivered goods shall, during such extended time, be borne by the Seller ; and unless the buyer shall have made default in taking delivery, the undelivered goods shall be at the seller's risk as regards fire until Four o'clock in the afternoon of the 31st day computed from the day of sale.

(*g*) All the wool bought must be paid for by the fourteenth day after the date of invoice, this being termed the *prompt day*. If the buying be done through an agent, $\frac{1}{4}$ per cent. commission is charged. Small lots of one to three bales together with damaged lots are always left till the last, and known as " star lots." If

it be desired to take a sample from the lots bought, a charge of 8d. for each draw is made. A rule of the saleroom is that the purchaser of one lot has the first claim on the next at the price of the room up to three bids, thus he has the opportunity of getting several lots in succession. Wool is sometimes bought for future delivery, on the continent this is often done for speculation purposes. Where the consumer, having sold his production, covers his requirements so as to be independent of the fluctuations of the markets, the transaction is legitimate, because at the time specified in the contract the wool is tendered and taken up. This method is often of great assistance. It is only when used as a means of gambling that it is injurious, since much of the wool so dealt in, has no real existence and the prices are misleading as to the true state of the market. There is no intention of taking up the wool when the time arrives for completing the contract, the transaction being made with the object of realising any profit which may result, by reason of a probable increase in its value at the time for completion. If, on the other hand, prices should begin to fall, the buyer will sell so as to reduce his losses; the differences being paid to the proper parties on the settlement days.

17. Relative Wool Values. The commercial value of wool, in the first instance, depends upon what it is required for. In fixing its relative value the buyer considers several factors, viz.: length, fineness, strength, softness, uniformity, colour and cleanliness, all of which are more or less variable. Fineness of fibre is of primary importance, and in proportion to the degree in which the other features are present, the value increases or diminishes. Length is a comparative term; whether a fine short wool is more valuable than one longer in the staple and stronger in the hair depends upon requirements, since for some purposes length is a disadvantage, while for others it is essential. The finest wools are the

shortest, and as we increase in length they also become coarser. Strength and uniformity of fibre are of great importance, but a detailed consideration of these must be left till a later stage. For general purposes, a pure white wool is the most valuable, though some of the fine natural browns are much sought after for special effects. Cleanliness is of great importance, because the impurities found in wool are so variable in quantity as to be frequently misleading with regard to the yield of clean wool, while their removal often occasions increased trouble and expense.

18. Suitability of different wools for specific types of woven and knitted fabrics.

The large number of distinct varieties of sheep upon which we draw for our supply of wool, combined with the influence of their surroundings, furnishes a very wide range of qualities from which a great variety of fabrics can be made. There is no rigid line separating the different classes, one gradually merging into the other, so that between the extremes there is a large number of intermediate types. The lustres and demilustres, the better kinds of which are such as the Kent, Irish and North wool. Some of the Colonial crossbreds, are made into serges, poplins, reps, cords and lastings, while the Gloucester, Devons and Cornish are used for braids, camlets, bunting and lastings. For carpet yarns the Scotch Black-face and Mountain wools, and their crosses together with Cheviots, the South American and Australian crossbreds, are used. The better types of Welsh and Irish, are made into moreens, damasks, Scotch tweeds, mixtures and knitting yarns. The Down wools are especially suitable for hosiery yarns. Merinos and fine crossbreds have a special application in the manufacture of worsted suitings, dress goods, cashmeres, Italians, etc. The coarser varieties of wool, such as the East Indian, are used for making blankets, flannels and carpet yarns.

CHAPTER II.

INFLUENCE OF CLIMATE AND PASTURE.

19. *Temperature and its Influence.* 20. *Relative Influences of Temperature, Skin and Blood.* 21. *Rainfall and its Influence.* 22. *Humidity a modifier of Rainfall.* 23. *Soil and Pasture.* 24. *Influence of altitude and contour.*

19. Temperature and its Influence.

ALMOST every district yields wools which are distinguished by some peculiar features. The same variety of shep produces wool of much better quality in some districts than others, the climate, soil, food and contour exercise a primary influence in determining the character. Hence, some areas are noted for their long, deep-grown wools, while others yield one which is short, fine and wavy. The fine wool-producing countries are characterised by their dry, equable climate, and the light sandy nature of their soil. It is significant, as well as important, to observe that they are situated in approximately the same latitude—30°, and are very similar in regard to temperature. No records are available covering the whole area, but a comparison of the principal centres shews that those districts in which the Merino reaches its highest development and yields the best results, have a mean annual temperature of from 60° to 64° F. Taking Sydney, Brisbane, Melbourne and Adelaide, the average mean annual temperature is 64° ; at Graaf Rienit, situated in the Karoo, in South Africa, 64'4° ; Buenos Ayres, 63° ; Central and Southern Spain,

and the South West of France, the home of the Merino, the mean is 64°. Again Sydney, Melbourne, the great Karoo and Buenos Ayres occupy the same relative position with regard to the line of snowfall, all being just inside the southern limit. In countries having a high temperature and very dry climate, such as Peru in South America, Arabia, Persia, Northern India, and Southern Asia, in general where the mean annual temperature is about 80° F., the fleece becomes hairy, coarse and harsh in character, but has, in some instances, an undergrowth of short, fine wool. In these districts the heat during the day is intense, owing to the hot sun and the capacity of the sandy soil for absorbing the heat, while in many cases the nights are extremely cold, a variation which exerts great influence upon the wool. Where a lower and more regular temperature prevails, together with a somewhat moist climate, as in Great Britain and Europe, which have a mean temperature of about 50°, wools of a medium character are produced, which, although stronger and coarser than the Merino, are pretty regular and true in growth, with the exception of the Mountain varieties, these being often mixed with coarse and dead hairs, yet, as a whole, they are much superior to those grown in the countries having a mean temperature of 80°. Britain furnishes a good example of the influence exerted by climatic conditions and surroundings; on the Downs a short, fine wool; in Lincolnshire, a fleece strong in the fibre, and of deep growth, while the mountains of Wales and Scotland furnish one which consists really of a mixture of wool and hair.

20. Relative Influences of Temperature. Skin and Blood.

This survey is important as showing the general influence of temperature, it must, however, be pointed out that there are extrinsic agencies which cause local variations, and these sometimes render a certain small area peculiarly suitable for wool growing,

while another is just the opposite. Temperature can only be regarded as a factor in the sequence of agencies which affects the wool, and it does not always seem to exert the same influence upon all classes of sheep. Those which inhabit hot countries have a tendency to produce hair instead of wool, and numerous instances have been recorded of the change produced in the fleece when sheep have been removed from one district to another having a different temperature, still, in the Merino, which has been taken to Australia, Sweden, America, and other countries, no very great change in its essential features appears to have occurred. In Venezuela, however, unless it is regularly shorn each year, the fleece becomes stronger and more hairy. While it is difficult to precisely define the influence exerted by temperature, it may be said to act in two ways, first, it partially determines the type or quality of the fleece produced, as seen in the case of Australia, Asia and Britain, and second, upon its influence, the soundness and regularity of the staple largely depends, so much so, that often means are taken to prevent the sheep being exposed to wide and sharp variations. Since the fleece, which is a part or modification of the skin for the protection of the animal, derives its nutriment directly from the blood, anything which affects the sheep is shown by the wool. Experienced observers can readily tell from an examination of the wool how the sheep have been treated between the seasons. The condition, thickness, density and texture of the skin, which are, strictly speaking, determined by the conditions to which the animal is subject, climate, etc., regulate the character of the fleece. A thick, strong skin, such as is caused by exposure and neglect, cannot yield fine, sound wool ; its elasticity and sensitiveness are impaired, the muscular and elastic tissue seem to lose their responsive action and cease to exercise their pressure and control upon the wool, hence it becomes coarse and hairy. A good illustration of this is seen in the occur-

rence of kemps, which are fibres that retain all the rudimentary peculiarities and have undergone no modification. The finest wool is produced by the upper layers of the skin, but if these be permanently affected by changes of temperature, the development of the stronger fibres in the lower layers follows to afford the necessary protection. As mentioned, the substances required for the formation and growth of the wool are furnished by the blood, which circulates through the numerous small capillaries in the skin. The quantity of blood which they convey, is largely dependent upon temperature. Under the influence of cold it is restricted, flowing away from the skin to the heart, this, together with the contraction which also takes place, has an injurious effect on the wool, causing irregularity, *i.e.* :— thin or tender places due to a deficiency in the supply of materials required for growth, and the pressure exercised on the fibres by the contraction of the skin. A comparison of the isothermic lines showing the relation of the wool-growing countries, and the districts having an equal annual range of temperature, seems to indicate that when the variation exceeds 30°, wools of the Merino type do not succeed, and where the difference is over 40°, as seen in the Asiatic countries, the fleece often consists of an admixture of fibres exhibiting every phase of development and modification, from extremely straight, long and coarse hairs, to an undergrowth composed of very short and fine fibre, of which the Cashmere is a good example.

21. Rainfall and its Influence. The rainfall and humidity of a district have an important bearing upon the quality and character of the wool which it yields. The fine wool-producing districts are notorious for their scanty rainfall, and the frequent occurrence of prolonged droughts, which, in the inland parts of the eastern portion of Australia, are apparently periodical, and as far as can be ascertained occur at regular

intervals, and sometimes last for 2 or 3 years, during which little or no rain falls. Australia as a whole furnishes a good illustration, in the districts near the coast, and in the vicinity of hills and mountain ranges, where the rainfall is the highest, the stronger varieties of wools, such as the Crossbred and the pure English breeds succeed best, and yield a fleece of excellent quality, while in the inland districts, which are exceedingly dry (the rainfall only being a few inches), the Merino flourishes and yields its best and finest varieties. The difference is well shown by a comparison thus, Sydney, on the coast, has 50 inches; Bathurst 23; Wentworth, in the Darling district, 500 miles inland has 14; the Western Plains, bordering on South Australia, only 8 inches; these two latter districts are noted for their wools which are very fine, soft and silky. In the Colony of Victoria, where the wools on the average are slightly stronger and more lustrous than those of New South Wales, the rainfall is somewhat higher in the growing areas, though very uncertain, and periods of drought are prevalent. Melbourne has 25 inches; Ballarat, an inland town, near the range of mountains, 27; Bendigo, 22; and Echuca, a town at the extreme north, 18 inches. In the Mallee, situated in the Wimmern district, the average is from 14 to 17 inches. South Australia, which supplies the Adelaide wools, has a rather heavier rainfall in the wool districts, varying from 18 to 24 inches, its effect is seen in the fleece, which is both stronger and coarser than the Sydney or Port Philip. Evidence seems to show that districts whose annual rainfall is not over 24 inches, are most suitable for the Merino; where this is exceeded, the wool acquires, to a slight extent, some of the features peculiar to the shorter types of the Crossbred variety. In South Africa, the features are somewhat similar. At Graaf Reinet, the average for 23 years is 14·5 inches, while for eight stations in different parts of the Karoo district, the average is only 9·6 inches. The grass

districts have a rather higher rainfall, thus at Richmond, the mean for 13 years was 12·8 ; Colesburg, for 14 years, 15·5 ; and at Aliwal North, for 25 years, 25·2 inches. No records are available for South America, but we may safely say they will approximate closely to those given. Mountainous and hilly districts generally have a high rainfall, which has an important influence on the wool, making it dry, harsh and hairy, partly owing to the natural grease being washed out of the fleece, as seen in the Scotch and moorland wools. An exception in this direction must be mentioned in connection with some of the Asiatic countries, the mountain ranges here are amongst the most extensive and highest in the world, but, yet in some instances, we have exceptionally dry areas, due to the influence of the prevailing winds.

22. Humidity a modifier of Rainfall. It does not necessarily follow that a district with a small rainfall is dry, on the contrary, it may be very moist owing to the humidity of the atmosphere, while another with a heavy rainfall may be comparatively dry owing to the porosity of the soil. Lincolnshire is a good illustration of the first. Here we have a wool typical of a moist district, and yet it is one of the counties with the smallest rainfall in England, but owing to the marshy character of its soil, the humidity is very high. When combined with a small or normal rainfall, we have a sandy, open soil, then the area is very dry, and the humidity low, owing to the water draining rapidly away, as seen in the case of Australia and Cape Colony.

A dry climate is essential for the growth of very fine wool, moisture causing it to become stronger, hence the humid character of Britain is not suitable for the Merinos, whilst its medium wools are unsurpassed. In a humid atmosphere the skin is relaxed, it is moist and elastic, under these circumstances the innumerable orifices which are distributed over its surface, are

comparatively speaking, large, and favour the development of a wool strong in the fibre, and since the sheep inhabiting these districts are large, well-built animals, they yield a fleece of a corresponding character, remarkable for its deep growth and strength. In the districts with a low humidity the opposite features prevail, the extreme dryness of the atmosphere is most suitable for a small sheep—other features being favourable—with a thin, close, highly-organised elastic skin, in which the pores are small and contracted, as in the Merino. Humidity, rainfall, and temperature are all factors whose influences are very closely correlated, and exceedingly powerful in modifying and controlling the growth of the wool, either injuriously or beneficially.

23. Soil and Pasture. The nature of the soil, and the character of the herbage it yields, are two most important factors. For fine wools, a light, porous, sandy, or chalky soil is essential, dryness and warmth being the attributes necessary. A heavy, cold, wet, clay soil favours the growth of long, strong-stapled wools of the Lincoln type. It is well known that a light, dry diet, such as rye and barley straw, produces a much finer and better wool than is obtained from the succulent and richer foods like turnips and oil cakes. On the Continent, a considerable quantity of straw and other dry foods in conjunction with protection from variations of climate, is the procedure adopted for improving the wool. Heavy feeding and fine wool are incompatible, this is well illustrated by the results obtained where the system of paddock feeding is followed. Mr. Herman Schmidt: "A wool grower in Australia, whose flocks were shepherded, had succeeded in establishing a good name for his wool, it was short, fine in the fibre and silky. He fenced his land and allowed his sheep to run loose. When the first clip of his paddock-fed sheep had been sold, his brokers enquired why he had gone in for so different a class of sheep than those which

realised such good prices. The wool had grown so much longer and coarser during the time of paddock feeding, that the clip appeared to have come from a different stock of sheep." Prof. Rhode made numerous experiments to ascertain whether the length and growth of the wool fibre were materially influenced by the system of feeding. The results have shown that the length and coarseness increase in proportion to the amount of nourishment consumed in excess of the ordinary demand, the fleece becoming the store for much of the digested food not required by the processes of growth or development of the carcase. Where the Merino flourishes the herbage is so short, dry, and scanty, that no other type of sheep could succeed. The composition of the soil requires consideration. In the case of fine wools, a year's growth extracts more potash from the food than the carcase requires during the whole existence of the sheep. The chief reason why some districts previously noted for the superior quality of their wool have degenerated is because of the exhaustion of the soil, and when the sheep are taken to a new district they regain their characteristic features. They are deficient in potash, and in parts of Australia the sheep have been known to travel long distances to lick the bones of animals that died, and their skeletons been allowed to remain. The wool from a new district, known as "blue wool," where the herbage has been burnt off before the sheep are put on to it, is always of good quality, because the potash derived from the plant ashes is in such a form that it can be readily assimilated by the growing plants, on which the sheep feed. In the Colonies, where deterioration arises from this cause, in the case of lands where sheep have been reared for a long time without any return being made, a dressing of potash would prove exceedingly beneficial. The Sharp handle exhibited by the South Down wool is attributed to the soil, which is of a chalky nature. Particles get associated with the fleece, and by their corrosive action and com-

bination with the natural grease with which the fleece is protected, make the fibres somewhat harsh. Bakewell has a good illustration upon this point; he says: "In parts of Derbyshire the arrangement of the mineral strata is often so abruptly broken, that two adjoining farms separated by a small stream, would be frequently found one situated upon limestone, and the other upon sandstone or millstone grit. The difference of the wool on these two farms, from the same breed of sheep, and particularly with regard to its harshness or softness, is so distinctly marked and well known, that the farmer would obtain 5 to 8 per cent. more for his wool when grown upon the latter soil." The soil often imparts a distinct coloration to the fleece. Upon this question Mr. Wright, the eminent breeder of Lincoln sheep, writes that "In Lincolnshire and the adjoining counties we have many different classes and colours of soil, and naturally as many different colours of sheep." For instance, upon his farm the fleece is always of a darkish colour from the sandy character of the soil, while upon his brother's farm, situated on the high chalk wolds, the sheep are pure white. In South Lincolnshire, owing to the strong nature of the land, the colour is darkish grey, while in the Fens, where the soil is black, they assume a still darker hue. To overcome this diversity of colour, recourse is frequently had to artificial colouring in order to secure uniformity in appearance.

24. Influence of altitude and contour. Altitude and contour must also be mentioned in connection with the agencies just considered, since they have great influence in determining the climatic conditions which prevail. The sheep is essentially a mountainous animal, yet so far as the fleece is concerned, it reaches its highest development in the lowlands, as seen particularly in Australia, which has a low altitude, and also in the River Plate district. Cape Colony has a greater elevation, averaging about 3000 feet, and

probably this is one of the reasons why the Australian Merinos deteriorate somewhat when taken to South Africa, and may also, to some extent, explain the success which has attended the introduction of the Angora goat, whose native place is the elevated regions of Asia Minor.

CHAPTER III.

IMPURITIES IN WOOL.

25. *Two classes of Impurities.* 26. *Percentage of Impurities.* 27. *Foreign Impurities.* 28. *Natural Impurities.—Yolk.* 29. *Relation of Secretive Glands to Fibre.* 30. *Chemical Composition of Yolk.* 31. *Cholesterol and its Commercial uses.* 32. *Removal and addition of Impurities.*

25. Two classes of Impurities. DURING its growth the fleece becomes impregnated with different impurities derived from various sources, which have to be removed before the wool can be successfully worked up into a thread. Their removal is one of the initial processes of manufacturing, and if not properly accomplished causes trouble in the succeeding operations. They vary considerably, but for convenience they may be classed as *natural—i.e.*, those impurities derived directly from the sheep, consisting of secretions and excretions from the skin, which play a very important part in the economy of the fibre—*foreign* : those impurities derived from the surroundings, comprising animal, vegetable, mineral matters and moisture in the form of dung, fodder, fruits, seeds, twigs, sand, etc.

26. Percentage of Impurities. Owing to the variation in the quantity of impurities which occur, the wool buyer has to exercise his judgment and rely upon his experience and observations in estimating the probable yield of clean wool, which is one of the factors he must consider in making his valuation. The impurities are always most abundant in the Merinos or Botany wools,

ranging in many instances from 50, even up to 70 per cent. of the weight of the fleece, as in some of the fine Colonial varieties, such as the Port Philip, Sydney and Adelaide, while in many of the mountain wools and those of a medium character, they vary from 10 to 20 or 30 per cent.

27. Foreign Impurities. The percentage and nature of foreign impurities vary greatly in the different varieties, and also in the different parts of the same fleece. The climatic conditions and character of the aurroundings amidst which the wool is grown influence the quantity, hence the same type or brand varies from season to season in the amount it contains, thus a very dry season causes an excess of sandy or earthy matter. The quantity and character of the vegetable impurities are very variable; some wools are remarkable for the large amount they contain. They are often very difficult to remove owing to b ing so intimately associated with a number of fibres. The worst in this respect are those fruits which are covered with spines or hooks, such as the "burr," the seed vessel of a species of Medicago; as the sheep are feeding these get entangled among the fibres, and work right into the fleece. Special treatment is necessary to remove them, and when present in any quantity, they reduce the value of the wool from 5 to 8 per cent. One of the worst wools in this respect is the Buenos Ayres, which is often literally one mass of burrs. At other times large quantities of small seeds, thistle and flower heads, twigs, leaves, and chaff, are intertwined with the raw wool, all of which are detrimental. The custom which prevails of branding the fleeces with tar is injurious, since it is extremely difficult to remove.

28. Natural Impurities.—Yolk. The natural impurities are the most important, they consist of a peculiar greasy or fatty substances termed yolk, which is derived

from the skin. Although the spinner regards this yolk as an impurity, it is absolutely essential for the protection of the fibre during its growth. When deficient, the wool loses its softness and pliability, becoming dry, tender, and wasteful. It varies both with regard to its composition and properties, being a sort of partially decomposed mixture of grease and alkaline matter—having a soapy character. Its colour is not always the same, though generally of an orange or yellow tint, it is sometimes brown, and varies from that colour to white, or it may have a greenish cast. It does not always exhibit the same consistency at one time, it may be dense, solid and granular, resembling in its toughness wax, or thin and watery, like melted fat. Occasionally it is of a peculiarly sticky nature, resembling varnish. A secretion of the skin, it is readily influenced by climatic conditions and food, but apart from these factors, some sheep individually seem to possess a constitutional tendency to secrete a yolk, remarkable either for its quantity or quality. An instance is recorded of a ram perfect in other respects, whose fleece had a "most objectionable white sticky yolk," and which could be found in his offspring for several generations. It is said that "the German and American Negrettes are noted for the objectionable nature of their yolk, while the Australian are almost free from it." When wool of the same type grown under different conditions or in successive seasons is compared, the effect of climate and food upon the yolk is very apparent. Experienced observers can tell to a large extent how it will behave in the process of scouring. Occasionally it is distinctly acid, though its normal reaction is alkaline. As a product resulting from the combination of the secretions, from two distinct kinds of glands in the skin, it will be understood that its composition is readily affected, if the proper action of either be restricted or stimulated. "A cold climate in conjunction with stable feeding has an undesirable effect on both the quality and quantity of

the yolk, and nothing will interfere so seriously with its removal in the washing than a diet of grain. A temperate climate combined with pasture feeding, not only seems to lessen the quantity of yolk produced, but in addition renders it more soluble." As the action of the sweat glands is more vigorous in a hot climate, to get rid of the superfluous moisture while those which secrete the fatty matters are less active, because of the consumption of grass instead of grains, the yolk produced is more uniform, and in a higher state of decomposition, owing to the alkaline substances predominating.

29. Relation of Secretive Glands to Fibre. Fig. 1 is a section of the skin, taken to illustrate the relation between the secretive glands and the fibre; A are the sebaceous glands, which are immediately concerned in the formation of the grease or fatty matters; they are attached to or form a part of the follicle or depression, in which the fibre is developed; there are two of them, one on each side, and they consist of a rather short, wide tube, which subsequently divides into a cluster of small flask-shaped sub-divisions. The interior is not as is the case with most other glands, filled with liquid, but is occupied by rounded or polygonal cells, and the grease of the yolk is formed by the breaking up of these cells, those on the outside form new cells, which by multiplication are pushed forward and bodily transformed into the secretion or sebum, as it is termed; this is pushed out by the new cells, which are constantly being formed. Observations show, that the secretion from the sebaceous glands, is relatively constant in quantity, although its composition is variable, which is due to its constituents being influenced by outside agencies. The sweat glands (B) are separate and distinct from the follicle, they consist of a secreting portion, and a conducting part; the former consists of a long slender tube arranged in a coiled manner, and situated somewhat deep in the skin; the latter originates in the coil, with which it is

continuous, runs in a wavy manner vertically to the surface of the skin. They are extremely numerous but unequally distributed, being more abundant in some parts of the body than others. They serve to regulate the temperature of the body by passing off the moisture. The secretion varies both in quantity and composition being influenced by the condition of the atmosphere, nature of the food and drink, and the amount of exercise taken. Normally it gives an alkaline reaction.

30. Chemical composition of Yolk. The chemical denomination of yolk is "suint," a complex substance, composed of various mineral salts, such as Potash, Lime, Soda, Magnesia, combined with animal oils, fats and acids, and in most cases potassium salts are the chief constituent. By treating raw, greasy wool, first with water, and afterwards with ether or alcohol, the yolk may be separated into two distinct portions, one soluble in water, consisting of what is termed sudorate of potash, formed by the combination of potash salts, with a peculiar oily substance secreted by the skin, which has been shown to be composed of potassium compounds of oleic and stearic acids, together with a small quantity of the fixed and volatile fatty acids, and also chloride and sulphate of potash. The portion of the yolk which remains undissolved by water is treated with boiling alcohol, which acts on the fatty matters, dissolving the neutral fat which consists of *cholesterol* and isocholesterol, both in the free state, and combined with various organic acids, such as acetic and formic. The portion which is not taken up by the alcohol is composed of compounds of cholesterol and isocholesterol, in combination with their higher fatty acids, stearic and oleic acids. Separation may be also effected by treating first, with an alcoholic solution of hydrate of potash ; this solution is then concentrated by evaporation, and afterwards water and ether are added. After thorough admixture by agitation, it is allowed to

settle, when it separates in two layers, the ether which forms the upper containing the cholesterol, which may be purified by crystallizing from a mixture of alcohol and ether.

If the water containing the sudorate of potash be evaporated to dryness, then calcined, and the residue afterwards redissolved in boiling water, some of the potassium salts may be separated by crystallization. At about 30° B. the chlorides and sulphates are obtained on cooling, and the remaining solution when evaporated to dryness, yields carbonate of potash. By this means it has been estimated that the fleece contains from 7 to 10 per cent. of its weight of potassium carbonate, and on the Continent, means are taken to recover and utilise it commercially upon an extensive scale.

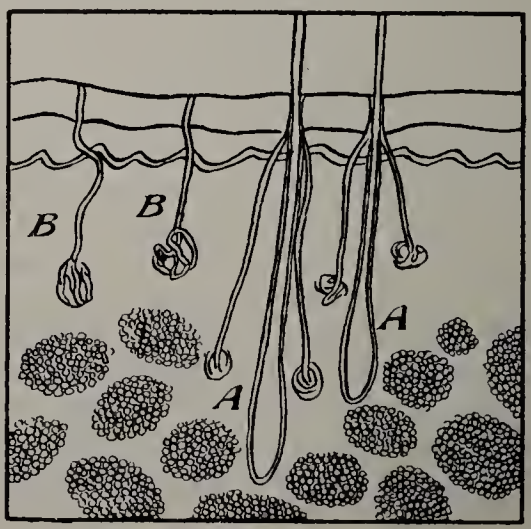

Fig. 1.

31. Cholesterol and its Commercial uses. Cholesterol is important, because of the uses to which it is being put commercially. It possesses the property of mixing with water to the extent of about 100 per cent. of its weight, forming a solid emulsion. It has affinities

with both alcohol and fat, its chemical composition being indicated by $C_{26}H_{44}O$, melting point 145° C., and specific gravity 1·067. When pure, it crystallises in white monoclinic tablets, it is not dissolved by water but is soluble in alcohol, ether, and the light oils generally. Being a product of the skin it is readily absorbed by it, and is now being very extensively used medicinally, as the medium in which drugs are mixed for the treatment of skin diseases. Its emulsion with water is used largely for toilet purposes, and is known as Lanolin, Lanolin Pomade, Lanolin Soap. Chevreul distinguishes two kinds of fat in the yolk, which differ in their degree of solubility in alcohol. To one he applied the term *stearerin*, which, under ordinary conditions, is a solid fat, but melts when subject to a temperature of 140° F. It is neutral in its properties, and does not form an emulsion when heated with water, but on boiling with potassium hydrate, emulsification takes place. It is soluble in 1,000 parts of alcohol, having a specific gravity of ·805. The second fat he terms Elairerin, which is less dense, and melts at 60° F., it is also neutral, but forms an emulsion with boiling water, and is saponified by potassium hydrate. The proportion in which they are found varies considerably in the different wools; if the stearerine be in excess the yolk becomes hard and stiff, and difficult to remove in the washing, while the elairerine causes it to be soft in its consistency, and easier to deal with in the scouring. Yolk is composed of various mineral substances, combined with organic fats and acids. When dried, it yields on analysis from 40 to 50 per cent. mineral, and 60 to 50 per cent. organic matters. Further examination shews the ash to consist chiefly of Potassium compounds, two estimations by Marcker and Schulz, are as follows :—

Potash	...	...	...	...	58·94 per cent.	63·45
Soda	...	...	...	...	2·76 ,,	trace
Lime	...	...	...	...	2·44 ,,	2·19

Magnesia	1·07 per cent.	·85
Ferric Oxide	trace	trace
Chlorine	4·25 ,,	3·83
Sulphuric Acid	3·13 ,,	5·20
Phosphoric Acid	·73 ,,	·70
Silicic Acid	1·39 ,,	1·07
Carbonic Acid	25·79 ,,	25·34

Another by Maumene and Rogelet gives:

Potassium Carbonate	86·78 per cent.
Potassium Chloride	6·18 ,,
Potassium Sulphate	2·83 ,,
SiO_2, P_2O_5, CaO, MgO, Al_2O_3, Fe_2O_3, Mn_2O_3, CuO.	4·21 ,,

Buckley's observations extending over a large number of examples taken from all classes, show a much greater variation than is indicated in these instances, thus one taken from wool, grown in a limestone district was :—

Potash	52·83 per cent.
Soda	2·42 ,,
Lime	4·72 ,,
Magnesia	2·03 ,,
Chlorine	3·72 ,,
Sulphuric Acid	5·61 ,,
Phosphoric Acid... ...	·71 ,,
Carbonic Acid	25·61 ,,
Silicic Acid	1·25 ,,
Other Substances ...	1·10 ,,

32. Removal and addition of Impurities. In order to remove some of the impurities from the fleece, sheep are sometimes washed a short time before shearing. Much difference of opinion exists as to the utility of the operation, and whether it does not slightly injure the wool. It results in a considerable reduction

in cost of transit, and enables the buyer to estimate the probable yield with more accuracy. From the farmer's point of view it is desirable, one might almost say, essential, because if the water be used for irrigating the land, many of *the mineral salts are returned*, which would otherwise have been a direct loss to the soil and expensive to replace. If the wool is to be used directly after shearing, no injury is wrought, but when, as is usually the case, a considerable time elapses before it reaches the spinner, and it is stored in very tightly compressed bales or sheets, and kept under all sorts of conditions, then the removal of the yolk has a decidedly deleterious effect. Having no protective substances, the wool has a tendency to become dry, its softness and elasticity are impaired ; on the other hand, when allowed to remain packed in the grease too long, the yolk is inclined to become tougher and sticky, and tends to stain or discolour the wool, giving it a yellow tint, still it retains its properties better, and invariably yields more satisfactory results than when it has been washed. Again the natural soap assists in the scouring, and the manufacturer can recover it if he desires, and extract the potash and fats. Mention must also be made of impurities added by the grower, which although perhaps not very important, nevertheless are present. Colouring matters of various kinds are used, in order to secure uniformity in the appearance of the sheep, as those who visit the showyards well know, thus the Hampshire Downs are tinted a rich yellow or orange, the Lincoln and Devons red. The introduction of any kind of foreign material whatever into the fleece, should be discountenanced ; the farmers have no idea of the trouble and injury which the various methods of "doctoring" the wool cause to the fibres and the manufacturer. Under the same category must be placed the different smears, dressings, and dips employed, their use may be imperative, and care should be exercised, both in their selection and application, only those being adopted

which, in addition to securing the desired result, do not injure the wool. There are instances where otherwise superior wool has been completely spoiled through the corrosive action of substances introduced into the fleece. What is required, is to keep the wool as far as possible in its natural condition.

CHAPTER IV.

INFLUENCE OF CHEMICAL RE-AGENTS.

33. *General Analysis of Wool.* 34. *Action of Alkalies.* 35. *Action of Chlorine.* 36. *Action of Hydrochloric and Sulphuric Acids.* 37. *Action of Nitric Acid and various Chemical Reagents.* 38. *Hygroscopicity of Wool.*

33. General analysis of Wool.

Wool is readily acted upon by a number of substances and conditions. Its complex composition, and the complicated nature and arrangement of its parts, make it easily influenced by various *reagents*, even when used in a dilute form or only for a short period. A reagent is a substance employed to detect the presence of other substances. When wool is placed in a flame it appears to fuse rather than burn, emitting a peculiar odour characteristic of horny substances. Owing to its porous character and cellular structure, it readily absorbs and retains moisture, but even at a low temperature begins to yield it up again, thus at 50°C it loses from 4 to 5 per cent. ; at 60° C, 7 to 10 per cent.; and at 100° C, 16 per cent. At this temperature the fibre becomes dry, harsh and inelastic. If the examination be carried further, it is found that at 130° C it begins to change its colour, becoming yellow, and gives off ammonia—evidences that decomposition is taking place ; long before this, however, a distinct odour of sulphur is perceptible. When submitted to dry distillation, water is first observed to be given off, and afterwards dense, heavy greyish fumes, consisting principally of sulphuretted hydrogen, ammonium carbonate, and a little bisulphide of carbon ; a

heavy, dark brown oil distils off, and collects in drops, the nature of which will be discussed when dealing with the chemical composition of the fibre. Hot water causes wool to swell and often to shrink in length, while boiling water softens it, making it somewhat gelatinous; continued treatment impairs its waviness or curl, and also has a tendency to destroy its lustre; super-heated steam completely destroys it, causing it to shrivel up into a small, dark, porous bead.

34. Action of Alkalies. The Alkalies, sodium hydrate, and potassium hydrate, have a very powerful influence on wool, while ammonia appears to have a very slight, if any, effect. A 2 per cent. solution of caustic soda will dissolve the fibres if boiled in it for a short time. When cold, it readily attacks the cuticular cells, and if the treatment be prolonged, seriously injures the fibre, impairing its properties and spinning capacity. Advantage is taken of this solubility when making estimations of the composition of mixed fabrics or materials. It is also further used for recovering the indigo from dyed woollens by removing the fibre. Under ordinary circumstances the alkaline carbonates have little influence on wool, but if used in hot concentrated solutions, the carbonates of potash and soda turn the wool slightly yellow, and make it sharper to the handle. These substances are used in the operation of scouring in conjunction with soap, as cleansing agents, and care should be taken to ascertain whether they contain any free or caustic alkali, since, as pointed out, they have a very powerful action on the fibre.

35. Action of Chlorine. *Chlorine* and its various compounds have a peculiar action on wool. They are so energetic in their influence that they completely destroy the characteristic features and change its properties, making it dry, harsh, hard and papery to the handle. Its tendency to shrink under the influence

of moisture and pressure, is neutralised, but at the expense of the desirable qualities which render wool so valuable. Numerous processes are available for chlorinating, those generally employed being either a solution of calcium hypochlorite in conjunction with a suitable acid or chlorine gas. When treated with about a 12 per cent. solution of calcium hypochlorite and equal proportion of acid, its ability to shrink is completely destroyed. Chlorination increases its porosity and absorptive capacity so that its affinities for the various salts and acids are more powerful, and produce effects essentially different from those yielded by the fibre in its natural condition. It retains, with great tenacity, absorbed substances, in spite of the action of frequent washing or acids. This increased ability induced by chlorine to concentrate colouring matters from their solutions in the fibre, is turned to practical advantage by the printer of Muslin Delaine fabrics and the dyer. Dilute solutions of chlorine cause wool to become distinctly yellow, but this may be obviated by treating moist wool with either chlorine or a mixture of chlorine and air, the moisture acting as a sort of tempering agent, at the same time securing equal treatment of all parts of the fibre which prevents it becoming yellow.

36. Action of Hydrochloric and Sulphuric acids. Dilute HCl and H_2SO_4 acids appear to exert little influence upon wool, being perhaps beneficial than otherwise. According to Weisner, a dilute solution of Sulphuric acid increases the strength and elasticity of the fibre. From numerous observations this view cannot entirely be accepted, for even after a short treatment a distinct alteration in the structural arrangement of the cells is apparent, the outermost project more from the shaft of the hair, and become distended. Strong solutions disintegrate the fibre so that the individual cells may be readily separated; concentrated solutions readily destroy the wool, producing a red solution. When

wool, in a moist condition, is exposed to the action of sulphur dioxide (produced by burning sulphur in air), it is decolourised or bleached, though the effect produced is not permanent. Solutions of this gas have the same effect. Water takes up about thirty times its volume of sulphur dioxide (SO_2), forming sulphurous acid H_2SO_3, which, however, is not a staple compound, and is readily converted into sulphuric acid by the aid of oxygen. These properties are utilised commercially in what is termed "stoving," which may be performed while the wool is in its raw state, or at different stages of manufacture, such as slubbing, yarn or cloth. Both methods are in use; for loose wool the liquid treatment is most convenient, while the gas is generally adopted for slubbing yarns and fabrics. In the latter, the quantity of sulphur required varies from 2 to 10 per cent. of the weight of wool, according to the condition, colour and density. The gas is retained very tenaciously by the fibres, but may be removed by a dilute bath of bleaching powder. Various explanations have been given of the action which takes place during the process, the temporary nature of the result seems to indicate that it is due to the colouring substances being reduced to a colourless state owing to the abstraction of oxygen, and the gradual reappearance of the colour arises from subsequent absorption of this element from the atmosphere. That this is probably the true interpretation of the change, is supported by the fact that other reducing agents produce exactly similar results. It has been suggested that the free sulphur invariably found in wool might possibly have some influence, but since the quantity is very variable in the different varieties, and all seem to respond alike to sulphur dioxide, it can scarcely be considered to be an essential factor. Where the liquid method is used, the decolouring is generally accomplished either with bisulphite of soda treated with acid, or by means of hydrosulphite of soda, which is said to be the more economical. If a solution of sodium

carbonate be taken and sulphur dioxide passed into it we obtain bisulphite of soda, which, when treated with sulphuric acid, yields sulphurous acid ; the wool is placed in this solution and allowed to remain for some time, after which it is thoroughly washed to remove all traces of acid. When granulated zinc is added to a solution of bisulphite of soda, the reaction results in the formation of hydrosulphite of soda, and zinc sodium sulphite which crystallizes out, leaving a clear liquid containing the hydrosulphite ; after separation this is diluted with boiled water and is ready for use. In this connection mention must be made of the influence exerted by various oxidising agents upon the colouring matter in wool. They produce a permanent change in contra-distinction to the effect yielded by sulphur, and depend for their action on the liberation of oxygen gas, which attacks the colouring matters present in the fibre. For this purpose either hydrogen peroxide or compounds from which it can be readily obtained are employed, as, for example, the peroxides of sodium and barium. The sodium compound, although the richest of the three in oxygen, because of its alkaline nature, cannot be used directly for bleaching. This method is especially suitable for wool which is to be dyed in light and delicate shades, but it must be observed that the operation does not always proceed at the same rate ; the character and properties of the wool, temperature of the solution, its alkalinity in addition to light have all some influence. After treatment the wool should be thoroughly washed in slightly acidified water.

37. Action of Nitric acid and Various Chemical Reagents.

Nitric acid differs somewhat from the other acids in its action. When heated with it wool acquires a yellow colour, swells and ultimately dissolves. Dilute solutions cause the fibre to become yellow, the exact nature of the change produced, or the character of the substance yielded to, do not appear to be thoroughly

understood as yet. Some chemists affirm it is due to the formation of xanthoproteic acid, others, a result of the partial conversion of the exterior of the fibre into picric acid. It is used as a "stripping agent" to remove the colour from dyed wools so that they may be used again. Some of the metallic compounds have a peculiar influence on wool; for instance, ammoniacal copper oxide causes a swelling of the fibre, and distention of the serrations; when treated with silver nitrate wool assumes a violet colour, which afterwards changes to a very dark brown. Nitrate of mercury gives a reddish brown. Sulphate of iron or copper, black, while the fibre is partially dissolved by zinc chloride. If an alkaline solution of the fibre be made, it turns violet on the addition of cupric sulphate, and blackens in the presence of acetate of lead.

Wool contains free sulphur which causes it, when brought into contact with such metals as copper, lead and tin, to become dark coloured. When boiled in a solution of plumbite of soda it turns black.

38. Hygroscopicity of Wool. The property which wool possesses of absorbing and retaining moisture, and the influence it has is of considerable importance both to the dealer and user, not only because it is necessary that a certain amount of moisture should be present to enable it to be used in manufacturing, but more especially because of its influence in determining, to a very great extent, most of those qualities which make wool valuable, viz.: softness, elasticity, and felting which are all dependent upon its presence for their manifestation. It is generally conceded that wool absolutely free from moisture would be of little or no use to the spinner, while it is equally true that an excessive quantity is undesirable. Wool is capable of absorbing and retaining under different atmospheric conditions varying quantities of moisture. For instance, if exposed to a warm and dry atmosphere it retains about 10 per cent., while under

warm and moist conditions it may absorb from 25 to 45 of its weight. In the interest of trade it has become necessary to fix a standard or maximum allowance, and for the purpose of testing, the Conditioning Houses have been established which furnish official certificates of the results. Excess of moisture renders wool very liable to attacks of mildew. This is a minute fungoid growth of a filamentous character, which entwines itself among the fibres, producing in the parts affected a complete change of properties. It usually appears first as small, white chalky patches, which subsequently turn yellow, and afterwards orange or brown ; as the brownish colour becomes more pronounced the minute filaments make their appearance which resembles a necklace consisting of a single row of cells, and are branched. As they develop, the infected portion usually assumes a black shade, and if examined microscopically, minute spore cases may be easily detected ; its presence is a serious matter since it seems to produce both a chemical and physical change, the wool loses its strength and elasticity, and refuses to take the dye.

CHAPTER V.

THE PHYSICAL STRUCTURE OF THE WOOL FIBRE.

39. *The Wool Fibre—Medulla Cells.* 40. *Cortical Cells* 41. *Cutical Cells.* 42. *Structural Variations—Kempy Fibres.* 43. *Complex Cellular Structure of the Wool Fibre.* 44. *Length and Fineness of Wool Fibres.*

39. The Wool Fibre—Medulla Cells.

THE wool fibre possesses a distinct individuality of its own and is widely different from any other textile fibre used in commerce. If transverse sections of the several varieties of wools be examined and compared, a diversity in their structural arrangement will be manifest. They will be observed to possess a distinct cellular structure, and in a typical example, the cells are seen to be arranged in three well defined concentric layers, resembling the tissues in a plant stem. The central part is termed the medulla, and is composed of large, more or less, spheroidal cells which frequently exhibit a nucleus, and also contain globules of fatty matter. Air is also often present, and may be readily detected by macerating in turpentine or some similar substance. The medulla is not found present in all wools, and is not always continuous throughout the length of the same fibre, the intermittent spaces being generally filled up with fibrous cells, or sometimes with granular matter resulting probably from cell degeneration. At other times it has a tubular or canal like appearance forming the axis of the fibre, and filled with a granular substance which may be coloured, transparent, or opaque. The occasional

occurrence of this central tube no doubt misled earlier observers, and caused them to conclude that the wool fibre was always hollow. In the finer wools the medulla is invariably absent, and in all cases its presence or occurrence is indicative of inferior properties. It is found most abundant in wools of a low kempy character, the cells varying considerably in size, ranging from $\frac{1}{600}$ to $\frac{1}{1800}$ of an inch in diameter.

40. Cortical Cells. Surrounding the medulla forming the intermediate layer is the Cortical. It consists of elongated spindle shaped or fusiform cells, more or less curved and angular as a result of pressure during the growth of the fibre. These cells vary very much in the different wools, in regard to number, length, diameter, and thickness of their walls, which have a very important bearing on the capacities of the fibre. The strength, elasticity and firmness of the wool depends upon the extent to which the cortical is present ; it is most highly developed in the fine Merino wool. Where it is absent altogether the fibres are of little value for manufacturing purposes. In many cases the cell walls present a distinctly laminated appearance when viewed in transverse section, and sometimes longitudinal striæ are also observed, probably due to secondary thickening.

41. Cuticle Cells. The external layers of the fibre are termed the cuticle and are composed of cells which have become flattened, dry and horny, presenting a scale-like appearance, and possessing somewhat different properties from the remainder of the fibre. The outermost layer of cells or scales has a portion of the margin free, and is imbricated, the cells overlapping each other like the scales on the body of a fish or the slates on the roof of a house, they frequently possess irregular margins and vary in number, form and attachment in the different wools. Upon their action and interaction depends to a large extent the spinning

capacity of the fibres due to the resistance which they offer when being drawn over each other.

42. Structural variations—Kempy Fibres. Every portion of the fibre is susceptible of either modification or suppression, hence in some instances we find all three layers distinctly developed, while in others only two are present. The cells composing the different layers present infinite variations, and to this factor, no doubt, the peculiar properties exhibited by some types of wool are attributable. Structural variations are exceedingly important to the spinner and manufacturer because of their influence. A microscopical comparison of the wools of commerce readily explains many of the features which have only been learnt by continued observation and numerous experiments. Why one wool responds more readily to certain methods or circumstances must be due to some peculiarity in its ultimate structure. For example, Scotch Kemps and Port Philip merino are as different as possible, both with reference to their properties and behaviour in the various processes of manufacture.

Kemps may be regarded as occupying one extreme with reference to structural modification, while Port Philip Merino represents the other. The same sheep often produces both kemps and true wool, and they are found more or less in all varieties and in different parts of the fleece, thus in some breeds they occur more particularly in the region of the neck, while in others they are mixed indiscriminately with the wool throughout the fleece. Exposure and neglect cause them to appear and increase in quantity, probably due to the tendency of all domesticated animals to revert back to their original conditions under the severe conditions imposed upon them. The same fibre is not always kempy throughout its length—often intermittent portions of normal fibre are observed. With reference to

them Dr. Bowman in his excellent monograph on the wool fibre, remarks :—

"I have not been able to detect in any instance a complete absence of internal structure. When examined as opaque objects by reflected light, they certainly appear ivory-like and solid, and by transmitted seem so dense, that very little can be observed, but if before examination they be treated with turpentine, then it will be seen that the interior is filled with loosely arranged medullary cells, but the most conclusive evidence is obtained when transverse sections are made, then it is seen that in most cases the cuticular layer is thin (though sometimes comparatively thick), and the interior is filled with spheroidal cells, which can be easily rendered more distinct by suitable stains. They are not "dead fibres" as some writers suppose, because they continue to grow in length, though not at the same rate as the other fibres. Still they are correspondingly thicker, and have approximately the same bulk. In the coarser wools they reach a length of from 2 to $2\frac{1}{2}$ inches, and in the finer are generally $\frac{1}{2}$ to $\frac{3}{4}$ of an inch long. They lack the lustre of proper wool, are dull and opaque, coarse, inelastic, brittle and do not amalgamate with the other fibres, but either ride on the surface of the end or are thrown off."

Kempy fibres retain all the characteristics of the fibre during the early stages of development. They are probably caused by permanent or temporary affection of the muscles belonging to the follicle in which the fibre grows ; though generally white, coloured fibres are frequently met with which vary from brown to black. If in contrast with kemps we consider a typical fibre from a well bred merino sheep a wide difference is observable ; not only is there no indication of medullary cells to be found, but the general construction of the fibre is quite different. Here the external layer of the cuticle is remarkable for the configuration of its flattened

cells, and the interior of the fibre presents features exactly opposite to those found in the kemps. It is much finer, more elastic and wavy, and it almost seems incredible that the same sheep could yield fibres so dissimilar in character. It represents the most highly developed modification of the wool fibre, and its properties render it extremely valuable to the manufacturer. The attention of the breeders has been directed towards securing the elimination of all the peculiarities found in the kemp. The whole of the interior is occupied by cortical cells very much elongated in shape and possessing extremely thin cell walls. But even here a wide variation exists in the different types, not only in the conformity of their individual cells, but also in the thickness of their walls. One wool is soft and pliable to the handle while another is sharp and harsh, and yet both may be equally fine in the fibre, a difference which at once suggests some minute structural disagreement. The properties of any particular type can only be regarded as the product of the units of which it is composed, especially when we consider, as pointed out in Chap. II., the factors which influence it both as regards quality and its attributes. Hence in wools apparently similar we must expect to find diversity of structure, for it is apparent in samples taken from the same fleece. The cortical cells have a very marked effect upon the capacity of the fibre, so much so, that generally it can be determined by a microscopical examination. Perhaps this is best seen in the shrinkage which takes place under the influence of moisture and pressure. Their ability to withstand and respond to the treatment to which they are subject in the process of manufacture, will depend both upon their arrangement and the strain which they are capable of withstanding. If their cell walls are much thickened they do not accommodate themselves so readily to the torsion which they must afterwards receive in the drawing and spinning ; this is well seen in yarns made from wools whose cortical cells are so formed. Nor can

we ignore their density, because if excessive, their elasticity is much impaired, it will prevent to a large extent the penetration and circulation of the yolk, hence the sharpness manifested where it occurs. A thin elastic membrane has more elasticity than a thick one subject to the same pressure. They seem also to possess properties differing from the remaining portions of the fibre not attributable to a difference perhaps in their chemical composition, but to the varied behaviour which the same substance frequently exhibits, and probably this may be explained by the difficulty which is experienced in getting rid of some of the free sulphur always found in wool. The cells of the cortical may be separated, and with care isolated by treating with sulphuric acid. In this way it is possible to detect cells in all stages of transition, from the round medullary form to the narrow elongated fusiform condition. Wools of the Buenos Ayres type have their cells more oval and thicker in the walls than the Sydney and Port Philip varieties.

The cuticle, especially in its external layer, exhibits a greater variation than any other part of the fibre. Almost every type of wool has a peculiar deportment of its scales.

43. Complex Cellular Structure of the Wool Fibre.

The wool fibre, as already demonstrated, has its origin in a group of cells, and under normal conditions it always retains its cellular structure, being composed of systems of cells which have become highly specialised for the performance of a distinct function in the animal economy. The wool fibre is an appendage or outgrowth from the skin (Fig. 1), agreeing with it in the character and arrangement of its cells, and of which, strictly speaking, it may be regarded as a modification. It has a very complex chemical composition, being composed of a substance termed Keratine, the analysis of which is given by Mulder as :— Carbon, 50·5 ; hydrogen, 6·8 ; nitrogen, 16·8 ; oxygen, 20·5 ; sulphur, 5·4.

The fibre is produced in a flask-shaped depression of the skin, which encloses its basal portion. The whole fibre may be divided into two parts—one which is protected below the surface of the skin by the follicle, the other extending above the epidermis, and which constitutes the wool of commerce. It grows in length by the continual addition of new cells to its base, produced by a group of specialised actively-dividing cells, which become considerably modified as they are pushed farther away from the point at which they originated. A careful examination of the wool fibre with the aid of the microscope reveals some very interesting facts relating to its structure and the arrangement of its parts. It is necessary, however, to carefully free it from all the foreign matters which may be present, by means of ether, carbon bisulphide or by washing, before submitting it to a microscopical examination. If, now, after thoroughly cleansing the wool of all its impurities we minutely examine its external peculiarities by means of light reflected on to its surface, we discover that instead of exhibiting a plain unbroken contour it is traversed by an infinite number of delicate markings, forming a perfect network throughout its entire length, branching and anastomosing in every direction. If we treat the fibres with a solution of caustic soda, and then examine them again, we find that it has produced a very marked change, and that the surface is broken up into numerous leaf-like scales or lorications which overlap each other at their bases, their free ends pointing from the base of the fibre to its tip (Fig. 2), and these free ends, curving slightly away from the shaft of the hair, form a large number of points of resistance. An examination of a number of fibres taken from a variety of breeds of sheep, shews that in each breed these lorications possess some peculiar distinguishing features, either in their form or number. In the finest Saxony wool, for instance, there are about 2800 per inch, the South Down about 2100, the Leicester about 1750, while some of the coarsest wools only

possess from 400 to 500 per inch. The presence and influence of these outer scales render the wool in many cases suitable for the production of a distinct class of fabrics ; they give to the fibre valuable and essential qualities, and very largely determine its spinning properties. The lustre exhibited by some varieties of wool, and which in a large measure constitutes their value, is dependent for its manifestation upon the size of these scales and the continuity of their surface, and if by any means they should become injured, the brightness of the fibre is affected in a corresponding degree.

If we now make a transverse section of a typical wool fibre and examine it carefully with the assistance of a high magnifying power, we find that the fibre is composed of an infinite number of cells which are differentiated into two or three distinct systems of tissues arranged around each other in a more or less concentric manner (Fig. 3), the cells in each system being widely different from one another. The outer layers, which compose the cuticle of the fibre, consist of much flattened horny inspissated cells D (Fig. 4), to which we have previously referred, and which serve to bind the internal layers of cells more closely together, and thus add to the strength of the fibre. They become flattened through the evaporation of their contents directly they emerge from the follicle, and this causes them also to shrink closer together. The cortical layers, which constitute nearly and sometimes entirely, the whole internal portion of the fibre, are composed of much elongated fusiform cells A and B (Fig. 4), having a length of about $\frac{1}{320}$ to $\frac{1}{500}$ in., and a diameter varying from $\frac{1}{2000}$ to $\frac{1}{5000}$ in. When the walls of these cells are examined with a very high magnifying power they are seen to have a laminated structure B (Fig. 4), resulting probably from the alternation of layers containing different percentages of moisture ; the thickness of the walls of these cells differs very much in the various classes of wools, ranging from

$\frac{1}{4000}$in. down to a tenuity which we fail to indicate by measurement. It is upon the thickness of these cell walls that the elasticity and tenacity of the fibre depends.

Fig. 2.—Wool Fibre, Showing Scales.

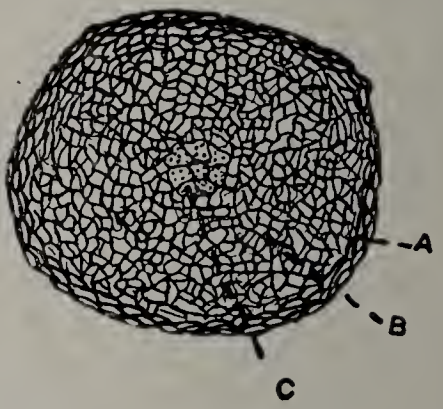

Fig. 3.—Transverse Section of Typical Wool Fibre.

A—Cuticle. B—Corticle. C—Medulla.

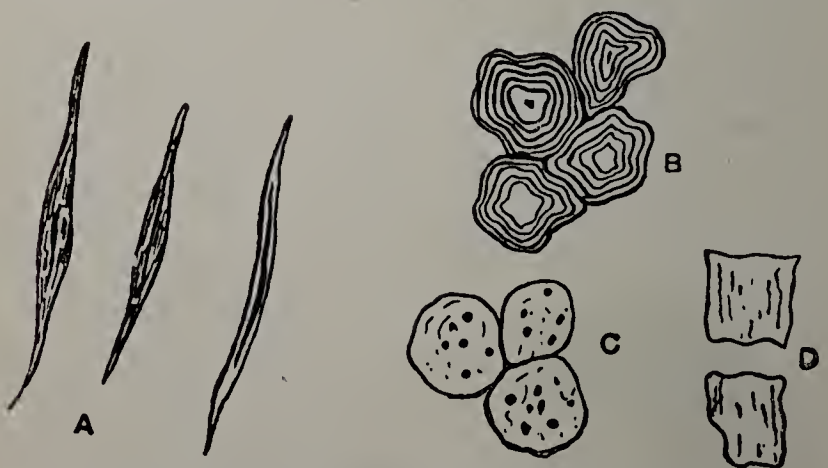

Fig. 4.—Isolated Cells.

A, Corticle Cells; B, Transverse Sections of Corticle Cells showing laminated walls; C, Cells from Medulla; D, Flattened Scales from Cuticle.

They are apparently composed of minute particles of matter free from each other, surrounded by a layer of

water. They are usually angular and somewhat curved, owing to the mutual pressure which they exert upon each other, caused by the shrinking of the cells of the cuticle. The laminated structure seems to be the result of internal thickening of the walls, which in some instances, particularly in the ranker portions of the fleece, continues, and produces a fibre having an ivory-like glassy appearance, rigid and brittle, known as kemps. In transverse sections made of numerous kempy fibres the cortical cell walls reach an abnormal thickness in comparison with the true wool of the fleece. The reason for this is not far to seek, for when we remember the function which the wool performs in the animal economy, it will be apparent that when the sheep is exposed to wide variations of climatic conditions the wool will make the first demand on the food materials, in order to protect it from the effect which these changes produce, and consequently a much greater quantity of materials is available for the growth of the wool; but since it does not produce a material increase in the number of cells formed, it must become deposited in the walls of existing cells, and thus it is that in the case of sheep exposed to the various inclemencies of the weather, kempy wool forms a considerable portion of the fleece, as seen in Scotch and Welsh wools; and just in proportion as the animals are sheltered and protected, so the quantity of kempy wool diminishes. The medullary portion of the fibre, when present, consists of more or less rounded cells C (Fig. 4), with soft flexible walls containing a nucleus, globules of fat, and other substances; they retain some of the peculiarities which the cells possessed in their earlier condition, and approach very near to their primary state immediately after their formation. In size they vary from $\frac{1}{1000}$ to $\frac{1}{2250}$ in. in diameter. By boiling wool in substances capable of disintegrating it, it is often possible to squeeze out the medullary cells. A reference to Fig. 4 will show the constituent cells of the wool fibre after isolation.

44. Length and Fineness of Wool Fibres. Wool also varies very much both in fineness and length, according to the conditions under which it has been grown, and the sheep by which it has been produced, reaching in some varieties—as, for example, the Lincoln—from 20 to 24 in. in length, while in some of the shorter Colonial or American wools it only attains a length of from 1 to 3 in. Some conception of the latitude of the variation which exists in the fineness of different varieties of wool may be formed when it has been calculated that on the coarse German sheep there are about 5500 individual fibres per square inch, while in the Merino from 40,000 to 48,000 per square inch are produced. Individual fibres vary from $\frac{1}{1600}$ to $\frac{1}{370}$ in. in diameter in the finer classes of wools, while the coarsest have only a diameter of about $\frac{1}{50}$ in. The weight of wool yielded by the sheep is also a variable quantity, ranging from 2 or 3 lb. up to 8 or 9 lb.

CHAPTER VI.

PHYSICAL PROPERTIES OF THE WOOL FIBRE AND INFLUENCE OF STRUCTURE.

45. *Characteristic Spinning Properties of Different Wools.* 46. *Moisture in Wool and its General Influence.* 47. *Moisture—Its Influence on Cellular Structure and Commercial Value of Wool.* 48. *Felting Properties.* 49. *Felting and Moisture.* 50. *Felting and Fibre Structure.* 51. *Felting Retardation and Thickening of Cell Walls.* 52. *Felting and Kempy Fibre.* 53. *Felting and Medulla Cells.* 54. *Felting and Yarn Characteristics.* 55. *Felting Accelerators.* 56. *Felting, Illustrative Examples.* 57. *Felting, Summary of Conclusions.*

45. Characteristic Spinning Properties of different Wools.

It is natural to expect to find in a structure so complicated in its composition as wool, and having such a complex arrangement of its parts, a variety of distinctive peculiarities ; and perhaps of all the various materials used in the Textile Industries, wool exhibits the greatest diversity of physical properties. It is upon these features that its utility for manufacturing purposes in a great measure depends, and the degree in which they are manifested by the various classes of wool to a large extent determines its value. The marked predominance of one or other of these qualities often renders it specially suitable for the production of a special class of fabrics. Thus, for instance, the Lincoln and Yorkshire wools are valued for their lustre, while the Australian wools are remarkable for the softness and elasticity of their staple. These physical properties are

primarily dependent upon the ultimate structure of the fibre, and are the collective peculiarities of the individual cells of which it is composed, and just according to the degree in which these cells become modified are the properties of the wool influenced. Briefly, they may be enumerated as fineness, length, trueness of fibre, strength, elasticity, softness, lustre, hygroscopicity, waviness and colour. These are not only influenced by the character of the cells, but there are other external causes which themselves act upon the cells, such as climatic changes and physical surroundings ; in fact, most of them may be said to be the outcome of the contact of the sheep with its environments. They are purely relative terms, because the value of the wool to the manufacturer must in the first instance depend on what he requires it to produce. Fineness, evenness of fibre and length, are highly essential qualities in wool, for when we consider the extent in length to which it is sometimes spun, reaching from 60,000 to 100,000 yards to the pound, and the small number of individual fibres in the cross section of the yarn at any given point, it will be seen that any variation in the regularity of the wool will produce a corresponding unevenness in the yarn. In worsted yarns of any class, the longer the wool is, combined of course with fineness of fibre, the better it will be, because the object of worsted spinning is to produce a yarn possessing a clear, smooth surface without any loose, straggling ends, in order to yield a distinctive pattern in the woven fabric. From an economical standpoint, also, length of fibre is desirable, since less waste is produced during manufacture. The length and fineness of the wool vary in almost every breed of sheep. Sometimes it is long and strong, as in the Lincoln ; at other times short and fine, as in Colonial wools. The finer the wool is, the more fibres it is relatively possible to place into the thread, and so increase its power of resistance, because the tension is then distributed over a larger number of independent points.

Softness, elasticity, waviness, and strength are also qualities specially desirable. The softness and elasticity of wool are peculiarities which make it superior to all other textile fibres for the production of articles of apparel. The degree in which they are exhibited differs in the various classes of wool, though they are more particularly associated with the finer varieties, whose cells possess very thin walls, which allow them to accommodate themselves to altered circumstances.

46. Moisture in wool and its General Influence. The natural affinity of wool for moisture exercises a considerable influence on the physical structure of the fibre. The presence of moisture also affects the elasticity, strength, diameter and quality of the wool generally.

The elasticity of the fibre is found to be the greatest when the wool is in a moist condition.

If a wool fibre be measured and then stretched excessively, and afterwards suddenly released, it will be found to be shorter than it was before the experiment. Again, if a fibre be thoroughly moistened and stretched and allowed to remain in this condition until it is properly dried, its length will be greater and its diameter smaller than before; but if it be again moistened and allowed to remain free, it will resume its former dimensions.

The hygroscopic property of the wool material is readily affected by changes in the humidity of its surroundings, and capable under favourable conditions of absorbing considerable quantities of moisture, which enters intimately into the mechanical structure of the cell wall.

47. Moisture—Its Influence on Cellular structure and Commercial value of Wool. A consideration of the ultimate structure of the wool fibre will no doubt be of assistance at this juncture, since any general characteristic features exhibited by the wool fibres, as a whole, must be the collective peculiarities of its component parts. A

wool fibre is a compound and very complex structure, consisting of an aggregation of cells which have become

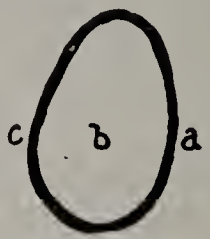

Fig. 5.

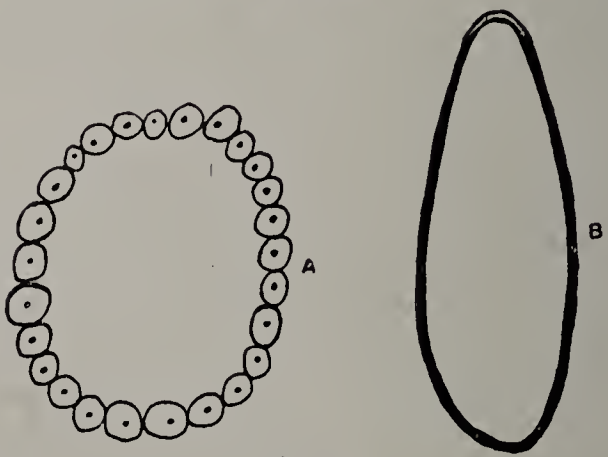

Fig. 6.

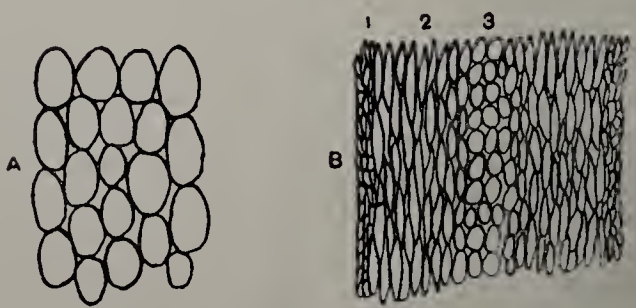

Fig. 7.

modified and specialised for the performance of a distinct function in the economy of the animal ; and some conception of the complicated character of their arrangement

may be formed when it has been estimated that in one inch of a fibre of Lincoln wool there are something like 125,000 distinct individual cells, each of which is playing its part in producing those qualities which make wool so valuable an article of commerce.

It is, however, upon the ultimate structure of the *individual cells* that attention must now be directed, since their properties must be determined by the materials of which they are built up.

Each of these cells is complete in itself (indeed it has been well said that a cell is in itself an organism), and it is to the arrangement of the materials of which these cells are composed, that we must look for an explanation of the different properties and phenomena manifested by wool. Taking a typical cell (Fig. 5), it is somewhat ovoid or egg-shaped in form, soft, flexible, and elastic, consisting of two parts, (*a*) the cell wall, and (*b*) the cell cavity. From many considerations and properties exhibited, the cell wall is not a continuous membrane, but, like the wool fibre, it is composed of an infinite number of minute component parts or particles of matter which together constitute the cell wall, and that each of these particles is surrounded by a layer of water (A, Fig. 6), the effect of which is to endow the cell walls with peculiar properties. Although it cannot be demonstrated by observation that this is the actual construction of the walls, yet it explains the phenomena exhibited, and many other peculiarities associated with the cells, so that it may be regarded as a fair inferential description of the arrangement in the cell wall.

Consider now how far this assists in interpreting the properties possessed by wool—viz., those upon which its commercial value depends, such as softness, waviness, strength, elasticity and flexibility. It will be observed at the outset that water is one of the most flexible and tenacious of substances ; it can be made to assume any form by using suitable vessels, and if placed upon a flat

surface it spreads out into a very thin film without its continuity being broken. In other words, it is a substance which readily adapts itself to circumstances. The cell walls are presumably composed of particles of matter surrounded by a layer of moisture, while the cell cavity in the earlier stages of the cell's existence is filled with fluids containing nutritive materials absorbed from the blood, and which supply the substances by which the cell increases in capacity. One peculiarity of the cells composing organised tissues and membranes, is that of allowing an interchange between fluid substances of different densities by passage through the walls of the cells which these occupy when contiguous. This may be illustrated by a simple but very instructive experiment. Take a wide-mouthed bottle and fill it with a saturated solution of common salt, and then over the mouth of the bottle securely fix a piece of bladder. The bottle is then inverted, and held suspended in a dish of pure water, and allowed to remain in this position for some time; if it be then examined, the water in the basin, which was previously pure, will be found to have acquired a distinctly salty character, owing to the interchange which has taken place between the water in the basin and the contents of the bottle. Applying the evidence thus furnished by this illustration to our consideration of the cell wall—viz., that animal membranes are permeable to fluids of different densities—we shall be able to account for some of the functions which moisture performs in the fibre. If, now, we take our typical cell (Fig. 5) which is full of fluid contents, and apply pressure to its sides *c* and *a*, it will cause the wall to assume a more or less elongated form (B, Fig. 6), owing to the fact that the fluid, in endeavouring to escape from the pressure, forces out the ends of the cells, its extension being rendered possible by the moisture present in the wall giving to it great extensibility. In fact, it may be said that the moisture endows the wall with its elasticity. This water not only renders it elastic, but it serves to

bind the particles of matter composing it together ; and while it permits of them being forced some distance from each other by internal pressure, it still preserves the continuity of the wall. By allowing the particles thus to separate, it permits of the intercalation of new ones between those already existing, and thus neutralises the tension caused by the pressure from within, through the absorption of nutritive materials from the blood. By this means the cell increases in cubic capacity.

It must be borne in mind that in its earlier stages the cell is continually turgid, and so long as this is maintained the cell will continue to increase in size ; but it must also be observed that at no two periods will the composition of the cell contents be the same, and consequently the new matter which is being added to the wall must also at different points vary somewhat in its properties. In short, the cell wall will not be uniform in its character throughout. Here, then, is reached one important conclusion—that the increase in the size of the cell depends on the pressure of moisture, and that in its absence no growth takes place.

Taking now a number of these cells, which are soft and flexible, and arranging them in close proximity to each other in a circular manner, and applying at the periphery a slowly-increasing pressure towards the centre, the effect will be that the whole of the cells will become elongated in order to accommodate themselves to the pressure exerted upon the outer wall. This is precisely what occurs in the formation of the wool fibre. In its earliest stages, while beneath the surface of the skin, it is composed of loosely-arranged ovoid cells with flexible walls (A, Fig. 7), all of which have originated from a group of actively-dividing cells. The wool fibre increases in length by the addition of new cells to its base, which are constantly pushing the older cells above the surface of the skin, and when once they reach the surface, the cells become influenced by other conditions,

which cause them to become considerably modified. A reference to B and A, Fig. 7, will show the difference which exists in the arrangement of the cells in the earlier portions of the fibre near its base, and those composing the older portions of the fibre. In the one case all the cells are similar, while the other shows them to be arranged in three well-defined systems (B, Fig. 7 ; 1, 2 and 3), each of which differs very materially from the other, and each gives to the fibre different properties. Since the walls of these cells are porous—that is to say, allow of the free passage of fluids through the interstices of their walls—it will be evident that directly they emerge from the surface of the skin an evaporation of the contents of the cells will begin, the outermost cells being the first to be affected ; but from the experiment previously considered, this evaporation of moisture—since it is continually increasing the density of the contents of the outer cells—will produce a constant interchange between the cell contents in order to establish an equilibrium.

This constant loss of moisture by evaporation will result in a shrinking of the cells, which consequently cause pressure to be exercised upon all those nearer to the centre, the effect being that the individual cells become considerably elongated and flattened. The change is most marked in those cells nearest to the periphery of the fibre. As a result of this change in the form of the cells, the fibre is able to bear a much greater strain in the direction of its length, since the tension is distributed over a much greater number of cells than could otherwise be the case if they preserved their ovoid form. Here, then, it is that moisture plays a very important part in determining the form of the cells and the strength of the fibre.

This shrinking caused by the loss of moisture has also much to do with the wavy character manifested by wools —particularly in fine wools—since the cell walls are not

uniform in their composition ; and this difference being brought about by the supply of nutritive materials from the blood, it follows that at any one point of the fibre or fibres the cells in the whole of that portion will approximately agree in their constitution. This being so, then the effect produced by the loss of moisture will be manifested by the whole of the cells which agree. Another feature also to be considered is the pressure consequent upon the loss of moisture, which forces the cells into much closer proximity to each other, this also having a tendency to produce a waviness in the fibre.

If wool be subjected to a temperature sufficient to drive out all the moisture it contains, it will be found that it is no longer soft, elastic and strong, but decidedly harsh, rigid and brittle. The conclusion is that these properties are dependent upon moisture for their manifestation, hence the presence of water in wool is of great importance to all concerned in its use for manufacturing purposes ; but if too much be present, then those qualities which under ordinary circumstances are necessary, become so marked as to render it almost unworkable.

This property which wool possesses of absorbing and retaining moisture is of considerable importance and interest to all consumers of wool, not only because it is necessary that some moisture should be present in the wool to enable it to be successfully used for manufacturing purposes ; but more especially because of the influence which it exercises in determining, to a great extent, those qualities which make wool commercially valuable. While it is generally acknowledged, from a manufacturer's point of view, that wool absolutely free from moisture would be of little or no commercial value, the converse is equally true, that an excessive quantity is most undesirable, since it would readily tend to produce mildew, the most dangerous form of disease which could attack wool.

48. Felting Properties. By far the most valuable property of wool is its ability to felt when agitated in soap and water. Many writers, if not most of them, appear to agree in saying that this quality is dependent upon the joint action of the serratures and curves in the individual fibres. If this is the case, then the degree of felting capacity should bear some relation to the multiplicity of the serratures and curves. In practice, however, it is found that there are many wools which appear to possess all the requisite features of a good felting wool, but which are in reality only indifferent in this respect. A large number of examinations of structure and comparisons of the behaviour of wools of different classes seem to indicate that the scales and curvatures are rather auxiliaries than the real cause.

In 1835, Youatt, from microscopical investigations, described the wool fibre as being composed superficially of numerous leaf-shaped scales or projections, with free margins, and pointing from the root to the tip of the fibre. These, Youatt says, are the cause of the disposition to felt. To quote his own words: "So far as the examination has hitherto proceeded, they are sharper and more numerous in the felting wools than in others; and in proportion as the felting property exists, the conclusion seems to be legitimate, and indeed inevitable, that they are connected with, or in fact that they give to the wool the power of felting and regulate the degree in which that power is possessed. If to this is added the curved form which the fibre of wool naturally assumes, and the well-known fact that these curves differ in the most striking degree in different breeds, according to the fineness of the fibre, and then multiplying in a given space increase both the means of entanglement and the difficulty of disengagement, the whole mystery of felting is unravelled."

These conclusions seem to have thoroughly satisfied the contemporaries of Youatt, and fulfilled the require-

ments of subsequent writers, since we invariably find them given by later writers—Bowman, Vickerman, and Gardner—as being the primary cause of felting; while Beaumont and Hummel recognise the existence of other auxiliary causes—*i.e.*, elasticity and flexibility, which act in conjunction with the curves and serrations in imparting this peculiar and valuable quality to the fibre. We may take it, therefore, that this represents the extent of available knowledge with reference to this subject, and it is here that we wish to take up an inquiry and endeavour to ascertain how far these explanations are supported or modified by later investigations. Since the discovery by Youatt upon which the conclusions are based, the means for carefully examining the minute structure of the wool fibre have been much improved, new methods have been introduced, and this, together with a much wider range of material which the increased facilities for transportation have placed at our disposal—in addition, also, to the greater variety of fabrics made from wool,—has brought to light some fresh facts concerning this interesting and important property. It will probably not be disputed that if the felting capacity of a wool is dependent upon the number of its scales and curvatures, then the microscope will be of immense service in enabling us to estimate the degree in which it will be present in every wool. Further than this, if such an intimate connection exists, the extent of the felting of the various wools will be approximately directly proportional to the numerical differences in the serrations and undulations. For instance, the number of serratures in merino wool is given by Youatt as 2720 per inch, and in South Down as 2080, or a difference of 640 between them; but no person who has had experience of the capacities of these two wools so far as felting is concerned will say it is in the same ratio. Again taking Port Philip wool, and Cape or Buenos Ayres if these are compared with each other they will all be found to possess numerous serrations,

and not much difference will be discernible between them. According to this they should practically occupy the same position among felting wools ; but what is the actual relation ? While Port Philip is one of the best felters obtainable, Cape and Buenos Ayres are very much inferior to it in this respect. Other examples might be given. Take the Donskoi wool, which so far as serrations are concerned stands in close proximity to Port Philip. Their felting properties are very widely different. These dissimilarities extending as they do, over such a number of varieties, are certainly significant, and evidently seem to indicate the existence of causes other than the scaly undulated surface which exercise a predominant influence over the felting properties.

49. Felting and Moisture. First let us consider what are the peculiarities associated with felting, then we may be in a better position to comprehend the causes. One primary and essential requirement is the presence of moisture, and the part which it plays is a very important one. When a piece of cloth or a strand of yarn, as well as a handful of wool, is milled or felted it always shrinks in length and width and increases in thickness, the individual fibres become more intimately associated, and form as a result a yarn or fabric which offers greater resistance to the passage of liquids or gases. If the cloth or yarn shrink, then the fibres must also do the same. That this is so may be proved by taking any known felting wool and carefully measuring its length and diameter ; after this, mill the fibres and then measure again. A comparison of the two results will show that after milling the fibres have increased in thickness and decreased in length. If transverse sections be made of the fibres before and after milling, it will be seen that the form of the cells has materially changed. At first those forming the exterior of the fibre were flat and very dense, while the internal cells only exhibited a small cell cavity. The diameter of the fibre should

be accurately measured by a reliable micrometer scale. After the process it will be found that the outer cells have lost their flattened form and become swollen, and in some cases, if the preparations have been carefully made and good lenses used, a distinct cell cavity may be detected. The inner cells have also increased in width, while the diameter of the fibre as a whole is greater. If a staple of greasy wool be taken, the fibres all pointing in one direction, and washed, still preserving the position of the fibres, then dried, the fibres will be found to be considerably shorter. Again, if a single fibre be taken and first measured, then moistened, and a small weight attached to it so as to stretch it, its length will be increased ; but when released and allowed to dry perfectly free, it will shrink. These all show that the presence of moisture endows the wool fibre with peculiar properties, and felting, in the true sense of the term, cannot be produced in its absence. No matter how much we agitate wool, or how entangled it may be, it does not felt unless saturated with water. It may be accelerated by the use of any of the alkalies, such as soda, potash, or any of the soaps, but it can also, to a certain extent, be prevented or retarded by the use of other substances, so that it is in some measure regulated by external conditions.

Having seen that the various wools exhibit a diversity in their power of felting, and even when apparently suitable conditions are present, the only conclusion to which we can come is that some inherent difference exists in the ultimate structure of the fibre. Bowman attributes the variation to the manner in which the epidermal scales are attached to the shaft of the hair, that in the best felters the serrations are more loosely attached and freer than in the others. We do not, however, think this is the true explanation, because there are wools—notably Buenos Ayres—where this exists, yet it is only an indifferent felter. Again, if it

depends upon the freedom or otherwise of the imbrications, we ought not to be compelled to use water to produce felting. The part played by the water is really the basis upon which the process depends, and we invariably find that those wools which respond most readily to its influence manifest the felting quality in the greatest degree.

50. Felting and Fibre Structure. That an intimate connection exists between felting and fibre structure is beyond question, and what we have to find is the change which takes place in the fibre, as well as the individual peculiarities of the different wools so far as their structure is concerned, if any exists. This can only be determined by a series of comparative microscopical examinations of each variety. For this purpose we procured, in the first instance, a series of transverse sections of the various wools to ascertain whether any departure could be observed in their internal arrangement. Even a cursory examination of these sections revealed the existence of wide variations in the ultimate structure of the fibres and their mechanical arrangement, which could not fail to exercise an appreciable, if not a primary, influence upon their felting qualities. The application of a much higher magnifying power, however, soon made it manifest that it was here we must look for an explanation of the divergence which occurs. Between the felting wools and the indifferent felters a wide contrast is discernible, and taking two types as extremes, every gradation between them can be readily traced.

Briefly a typical wool fibre has a cellular structure, and consists of an aggregation of cells which are arranged in three well-defined systems of tissues more or less concentric with each other. In most cases these are easily distinguishable and sharply defined, but in a typical fibre one gradually merges into the other without any distinct boundary. The periphery or epidermis, generally termed the cuticle, is made up of several

layers of closely appressed squamose cells, overlapping each other, whose walls have assumd a dense horny character. Under normal conditions they exhibit no cell cavity, but when treated with the caustic alkalies they swell, and often a well defined opening is visible. Its composition or properties are apparently different from the other portions of the fibre, but in all probability it is really a metamorphosed condition of keratine, which, while it may not be essentially different chemically, is nevertheless very dissimilar in its behaviour to and with certain substances or influences. Within these investing layers we have the cortical tissue, which constitutes the greatest portion of the fibre. It consists of elongated fusiform cells, upon which many of the physical properties of the fibre depend. The central portion, or medulla, is made up of more or less spheroidal cells, which retain their primitive structure, and generally contain protoplasm and oily as well as granular substances. Either of these systems of tissue is susceptible of modification, and very frequently one or the other may be found wanting altogether. Their absence or presence endows the wool in which it occurs with some marked peculiarity. In some cases, for example, the cortical portion is suppressed, and the whole of the interior is filled up with medullary cells. On the other hand, in many instances the cortical tissue occupies this position. Apart from this difference in arrangement, we also find that the same tissue in different wools manifest important variations both with regard to the form and nature of their cells. In its embryo state, the fibre is composed wholly of ovoid cells, which subsequently become modified into the medulla, cortical and cuticle. It will be seen, therefore, that they all originated from a common source, and any distinctions which they exhibit are assumed after their formation. This has a very important bearing upon our subject. The collapse of the outer cells owing to the evaporation of their contents produces lateral pressure upon the cortical cells, causing

them to assume their fusiform shape. *Those cells, therefore, which possess the thinnest and most elastic walls, will yield very readily to the pressure and receive the greatest modification. This is a characteristic feature of the best felting wools.* The extent of the modification is very largely dependent upon the rigidity of the walls. (See Fig. 6, page 60). Bearing these in mind, let us apply them to one or two varieties of wool, when we shall be better able to deal with the chief classes according to their felting qualities. Taking as an example of

Fig. 8.

a felting wool the Port Philip, we find it is noticeable by the absence of medullary tissue, and also that special features are present in the cortical cells. Not only are they very much attenuated, but they possess extremely thin walls, and the cuticle is also very thin.

In Fig. 8 we give a micro-drawing of a series of sections from Port Philip wool, very highly magnified, which shows the characteristic features necessary for superior felting properties. It will be apparent, since the cell *walls are very thin*, that the maximum amount of elas-

ticity is obtained. Moisture can easily penetrate into every portion of the fibre, and the cells readily respond to its presence and influence. Seeing that they have departed from their original form by external pressure, when this force is removed they gradually revert to their first shape. The extent to which this takes place determines the degree of shrinking.

51. Felting Retardation and thickening of Cell Walls.

Another important factor, however, must here be observed, which in many instances prevents the cells resuming their round shape, viz.—secondary thickening of the walls—and we are led to believe that this forms one of the chief causes why some of the finer wools are but indifferent felters. During the time that the wool fibre is upon the sheep's back it receives a constant supply of nourishment from the blood, as well as a certain quantity of yolk and fatty matter from the sebaceous glands.

By virtue of its function as the protective covering of the animal, it makes a large demand upon the food supply, and when this is rich and abundant it consequently receives more than is necessary for its immediate requirements. This is well seen in the various clips yielded by a single sheep. If taken and compared, so far as we can make out, each year a difference is discernible in the cell walls, the first and second being apparently the most marked. Probably this in a great measure accounts for the superiority of lamb's wool. Little or no secondary thickening has taken place, and the cells retain their softness and elasticity, the walls being comparatively very thin when contrasted with succeeding years. In this case the food is required by the actively growing tissues in the various parts of the body, and therefore no surplus is left to accumulate. On the other hand, as maturity is reached and the various organs become fully developed, it is only necessary to renew the wear and tear of the cells, and the demands upon

the food are proportionately less, and more is available for the strengthening of the tissues. What is not used must either pass from the system or be stored up somewhere where it will not interfere with the vital functions, and that which finds its way to the wool appears to be deposited in the interior of the cells in concentric layers, so that when seen in section it presents a laminated structure, due, no doubt, to the different density of each layer. Some of this deposited matter can be removed by solvents, but it impairs the properties of that particular class of wool.

52. Felting and Kempy Fibres. Fig. 9 shows a number of sections of kempy fibres from China wool. A wide difference exists between these and the Port Philip just described. The whole of the interior is composed of spheroidal medullary cells with thick walls, while the cuticle also is well developed and assumes a horny character. It will be obvious that the change which accompanies the absorption of moisture will be less marked than in the previous example. The fibres still retain to a great extent their primitive peculiarities, the only observable alteration being that the cells increase in size and the walls are thickened. We have in this instance conditions the reverse of suitable for shrinking and felting, and consequently kemps are the worst fibres to use for this purpose, since, being devoid of curl and somewhat stiff, they do not readily amalgamate with the others or each other, and are always regarded as being a sign of inferior quality.

All the kempy fibres belonging to the English wools we have examined are similar in structure to Fig. 9, but when we come to the fine Botany a difference is at once seen. Here the medulla does not occupy the whole of the interior, as seen at Fig. 10, which is taken from coarse Sydney kemps. These approach nearer to the typical fibre, but still manifest the defects previously

mentioned. The presence of medullary cells always indicates impaired properties.

53. Felting and Medulla Cells. These extremes as represented by the examples chosen are connected by a somewhat large series of intermediate forms, in which the various stages of cell modification may be observed. For instance, in the coarser fibres from the Argyleshire sheep the medulla is not as well developed as in the kemps, but yet it forms a large portion of the fibre. Taking staples from various parts of the fleece, we can trace its gradual diminution until when we arrive at the shoulders it is entirely supplanted by cortical tissue. These are, however, not very elongated, and possess somewhat thick walls. In the Lincoln the medullary cells are not so numerous, constituting in the preparations we made only a small part of the fibre, and that in the worst part of the fleece. They appear to be easily modified, and hence they are absent from the remaining portions, though the cortical are more or less round as we approach the centre.

In the Buenos Ayres wool were occasionally found distinct evidences of the presence of medullary cells, but these were very small, and apparently on the point of extinction. On the other hand, in find Sydney wool we so far have been unable to discover them, though we should not like to affirm that they do not occur. Experiments seem to indicate that as we approach or recede from either of these extremes the felting property becomes more or less pronounced as the case may be. From this we therefore gather that the shape of the cells composing the interior of the fibre is one of the principal factors to be considered. All elastic enclosing membranes when forced out of their normal shape will, if their elasticity is not impaired under the changed conditions, return to it again when the pressure is removed. Hence we see, assuming that no secondary thickening has taken place, that those cells which have

departed most from the primitive form will, under favourable conditions, shrink and felt the vest. Except in the case of lamb's wool, however, it is not often that we find fibres of this kind ; in fact, we do not remember a single instance out of a very large number of examples of wether wool belonging to almost all the available breeds of sheep, where we found that no secondary thickening had taken place. True, it varies very

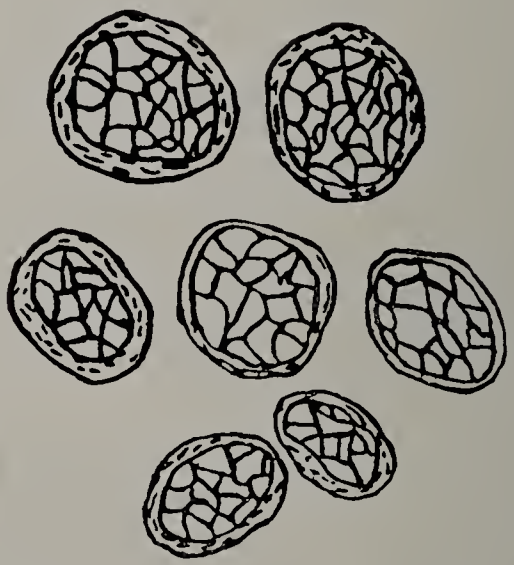

Fig. 9.

greatly in the different classes, in some cases being such as to give the fibre a bright ivory-like appearance and devoid of any ability to shrink much, as in mohair. There does not appear to be any systematic arrangement of the thickened walls, as we find them occurring either singly or in small groups, some, as it were, being more predisposed in this direction than in others. Under a low magnification they appear in transverse sections as highly reflective spots, and when examined superficially we see their fusiform character.

54. Felting and Yarn Characteristics. A careful study of the typical yarns made from wool will no doubt afford some additional and valuable evidence upon the question. If felting is dependent upon the interlocking of the outer scales, it should take place to the greatest extent when the fibres are arranged in strictly parallel order. The most suitable conditions are then present, every facility being afforded to enable the whole of the scales to come into action, and if in addition we place each fibre as close to the others as it is possible to get them, we might reasonably expect they would easily felt. But what do we find is actually the case in practice ? Where this arrangement is adopted the yarn is quite unsuitable for felting purposes. In a worsted thread it is the constant aim of the spinner to place his fibres all side by side with each other, binding them close together by imparting a fair amount of twist, and the ends of the fibres are mostly buried in the body of the thread and held fast. We have here, apparently, the essential requirements, and especially when we remember that in its course of manufacture the ends are doubled some thousands of times and reduced in thickness. Under these circumstances the fibres can hardly fail to be lying in opposite directions with their serrations in very close proximity and ready for interlocking ; yet of all the yarns made from wool the true worsted thread is the least adapted for felting purpose. Earlier writers probably recognised this but did not realise its cause, hence they tell us that it is because the outer covering of the fibres has been removed and considerably damaged by the process of combing and its preparatory operations. Unfortunately for their theory, however, this is not the case, as every means is usually taken to preserve the exterior of the fibre, since upon its preservation the success of spinning depends. When the treatment is such that damage is likely to result, the wool is oiled so as to lubricate and enable the filaments to slide smoothly over each other.

It would appear from the above that the evidence shows the conclusions of Youatt to be defective, and we think conclusively proves that felting is dependent on other factors than the imbrications. The reason seems to be, at least so far as our experiments go, that the construction of the thread is such that it prevents the requisite shrinkage taking place to enable the fibres to felt ; since the ends of each fibre are practically fixed, no decrease in length can take place, this being also further prevented by their being tightly wrapped around

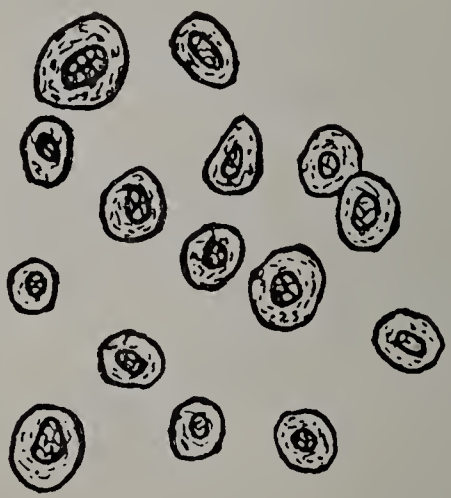

Fig. 10.

each other. On the other hand, in a woollen thread the fibres are disposed in a manner precisely opposite to a worsted thread. They cross and recross in every direction, no attempt being made to impart any regular arrangement to them. All kinds of fibres are utilised, both long and short, curly and straight, entering into the construction of the yarn. Further, since they are not tightly bound down throughout their length by twist, the ends are to a great extent free, and protrude from the body. When much felting is required it is made loose and open, so as to admit of all the fibres

readily responding to the action of the moisture and mechanical appliances. A woollen thread is unquestionably the most suitable for felting purposes, but here the very opposite conditions prevail from those which the earlier propositions require. The relation of the fibres precludes the maximum amount of interlocking taking place, since any two fibres can only be in contact for a very small space. It is generally conceded that the presence of short fibres facilitates felting, and imparts to the yarn a more oozy nature. This, however, is inexplicable, unless it be admitted that the length is an auxiliary which plays some part in the process.

Reverting to the growth and formation of the fibre, we saw that in its earliest stages it was compoaed of round and oval cells, and these became subsequently modified, and the greater the modification the greater the shrinkage. It follows, therefore, that the nearer we approach to the tip the more pronounced it will be, the cells composing the root being incapable of change. When the fibre is free, the base is drawn towards the apex, and in a long fibre where these two points are widely separated the alteration will be proportionately less than when they are nearer. It might be probable that this in some measure accounts for wool not felting under ordinary conditions on the sheep's back, since owing to the root being fixed in the skin it cannot be drawn towards the tip. This also explains why it is necessary, as in the case of the woollen thread, that to ensure felting properly at least one end of the fibres must be more or less free.

55. Felting Accelerators. Experience and observation show that the felting may be accelerated by certain conditions, such as heat, pressure, and the presence of alkalies and acids. But this can only be accounted for on the assumption that these agents produce some change in the fibre itself. If a piece of hard felt (which may be readily made in a hot acid

solution) be examined, such as that used for felt hats, where the process has been carried to an extreme point, we find that the fibres have become so intimately associated and united as to produce a texture approaching in density to wood, which can be sawn and worked in a similar manner. Here the filaments have in a great measure lost their individuality and become practically cemented together, so that they can be readily moulded into any desired shape. It will be evident, therefore, that we have a material which at some stage was very plastic. But under natural conditions wool or hair only exhibits this property in a very limited degree, consequently it must have been induced by the agents or methods employed.

Wool is a modified form of gelatine, probably an intermediate form between pure gelatine and horn, manifesting the qualities of each. Nothing definite is known as to its chemical constitution or composition, the results arrived at by various investigators indicating wide variations. For our own part, we have not yet found any two species or varieties of wool which agree in the result they yield. It may be affirmed with some degree of certainty that it cannot be regarded as a simple definite chemical compound, and we therefore separate it into two parts, which not only possess a different constitution and composition, but also different properties. One of these is much less readily influenced by acids and alkalies than the other, but it only begins to develop after the formation of the fibre, and constitutes what has been previously designated as secondary thickening.

When wool is immersed in hot water it swells up and becomes soft and gelatinous, and if while in this condition the fibres be subjected to pressure, they will adhere together and become flattened somewhat, according to the amount of pressure exercised. We also know that caustic alkalies possess the power of dissolving wool

readily in hot water, and that the carbonated alkalies cause the softening to become more pronounced. When these are used in conjunction with pressure, the fibres become flattened and welded together. Acids produce similar changes. The result is that for the time being the cell walls are in a very plastic condition and readily respond to external pressure. In the case of strong wools, where a considerable amount of thickening has taken place, it appears that this varies greatly in its composition, because in some cases it is found to be readily acted upon by certain reagents, whereas in others it is unaltered. Its varied behaviour with stains also indicates some difference in composition.

Apparently the primary cell walls are most responsive to the action of the water, acids and alkalies, consequently where no secondary deposit exists they soon become soft and pliable. By boiling in strong sulphuric acid the fibres become flabby, and if carefully manipulated may be separated into their component parts. The disintegration is principally due to the destruction of the primary cell walls, by the acid, which is shown to be the case by testing with separate stains that exhibit a selective power. If, however, the experiment be carried far enough, the secondary deposit is destroyed as well. This supports what has been previously observed—viz., that in those wools where thickening has taken place, the felting quality is reduced. What is the precise nature of the difference between the two portions of the cell wall has not yet been determined, for while they possess some properties in common, they are very distinct in other respects, which may probably be due to the presence of a greater percentage of mineral matter in the internal layers.

Herewith are given figures of isolated cells from several wools, and although we could not expect them to represent their form when *in situ*, because they must have altered somewhat during the treatment for separating

them, still, since all were subject to the same conditions, they furnish interesting comparative evidence. Suitable stains have been employed in order to ascertain to what extent a differentiation of structure exists, this being indicated by the behaviour of the cell walls with regard to the absorption or rejection of the colouring matter.

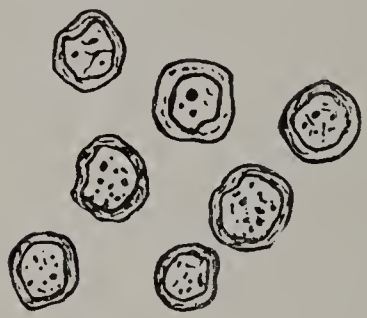

Fig. 11.

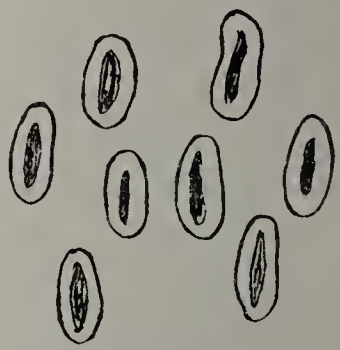

Fig. 12.

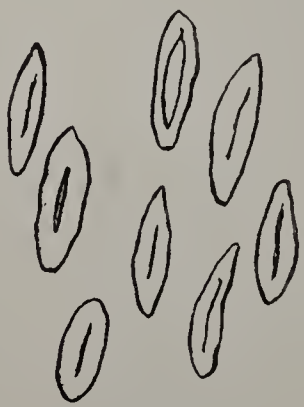

Fig. 13.

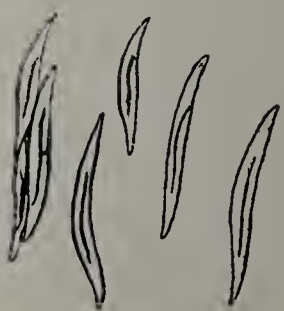

Fig. 14.

Where in the case of two varieties of wool one retains the colour, but the other is uninfluenced, we necessarily infer some difference in their properties and constitution. For example, in the case of the Lincoln and Port Philip, while one stains readily, the other only takes it very slightly, showing a considerable difference in the density of the wall. Further when treated with caustic soda, one is dissolved more readily than the other, which

therefore confirms the evidence drawn from the action of stains. This may be regarded as showing that on the one hand the cell walls are more horny in character and denser in structure than the other. It will be evident that this must exercise some influence on the felting capacity, because the wall can neither shrink as much nor become as plastic when dense and horny, as it will if it is gelatinous. As the wool gets coarse and strong the harder it becomes, due no doubt in the first instance to the size of the cells composing it, for just in proportion as the fibre degenerates, its cells increase in capacity rather than number, and become correspondingly stronger and firmer, as is shown by the lustrous character of some of the wools of this description. However they may be manipulated, they do not become properly felted, since the fibres, although crossed and entangled very intimately, lack that peculiar cohesiveness which is always a characteristic of true felting.

56. Felting Illustrative Examples. Fig. 11 shows some cells (isolated) from kempy fibres out of Scotch wool. Their roundness contrasts strongly with the spindle shaped cells from Sydney and Saxony wools, and the walls are also thicker and much more dense. Upon this point Dr. Bowman, in his "Wool Fibre," remarks: "The whole substance of the fibre assumes a much more dense appearance, until even the cellular character of the cortical part is entirely obliterated and the fibre assumes the appearance of an ivory rod without any internal structure being visible." Although we have not yet succeeded in detecting any instances where the transformation was so complete, or the cells filled up to the extent alluded to, still the change which does occur is such as to prevent felting. No shrinking can occur, owing to the roundness of the cells and their rigidity preventing the requisite softening taking place to ensure amalgamation.

At Fig. 12 are cells from a coarse Asiatic wool, in

which we observe that while they have departed somewhat from the rounded form, they possess thick walls. This is one of the varieties in which the early stages of transition are found, and no doubt by careful attention and feeding it might be made still more pronounced. From experiments made with these fibres, the shrinkage was only slight, while they manifested no disposition to felt when agitated in hot water.

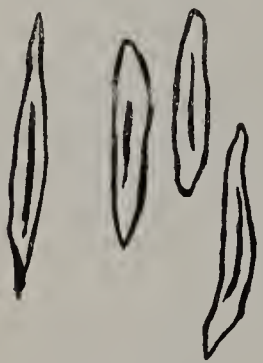

Fig. 15.

Fig. 16.

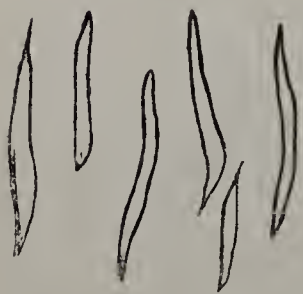

Fig. 17.

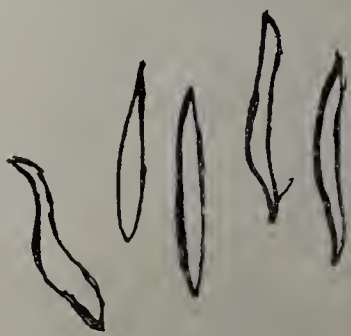

Fig. 18.

Fig. 13 shows cells taken from fibres of the worst part of the Scotch fleece, while Fig. 14 are cells from the finest fibres from the shoulders. When compared with Fig. 11, also obtained from the same sheep, they are very interesting, as indicating the amount of variation

which exists in the produce from the same animal. It will be seen that the cells become more elongated and thin-walled, and in the same proportion the felting quality increases, though they are very far from possessing the qualities of a superior felter, the quantity of secondary deposit being great, and the walls dense and horny with faint striations.

At Fig. 15 are shown examples of cells from strong, deep, Lincoln wool. Here the fibres themselves are horny and lustrous, due to the size and nature of the cells. While the elongation is apparent, the thickness of the walls precludes the absolute penetration of water in order to thoroughly soften them ; hence this variety is not used for felting purposes. It is, however, a distinct departure from the primitive cell, and indicates in which direction the change takes place ; and still more evident is this when we examine cells taken from colonial bred sheep (Fig. 16), for here not only is the attenuation increased, but the thickness is perceptibly less, showing therefore that the altered conditions have produced a change in the character of the cells.

In contrast with the above figures, we may now consider one taken from a very fine Port Philip fleece (Fig. 17). Here a great difference is at once observed. The general features of the cells are completely changed. Secondary thickening has only taken place in a very slight degree, consequently it is very suitable for felting. The walls are exceedingly thin and membranous, readily acted upon by water, reagents, or stains, when they lose their shape and become soft, easily adhering together. The numerous waves or curves are no doubt some assistance in helping the fibres to bind themselves more intimately to each other, but they cannot be regarded as primary factors in the process.

Fig. 18 indicates some cells taken from Buenos Ayres. Contrasted with the previous example, it is observed that the walls are much thicker, and when

tested with stains and reagents are also found to be much more horny in structure, which accounts for the difference between these two wools.

57. Felting, Summary of Conclusions. The evidence gathered serves conclusively to show that the process of felting is not by any means as simple as many writers assume. On the contrary, it depends upon several intrinsic and extrinsic causes, and instead of resulting merely from the interlocking of the superficial cells of adjacent fibres, it must be regarded as the outcome of a series of modifications in the structure and composition of the fibre. We must therefore dismiss the conclusions of Youatt upon this question, and look in other directions for the causes. The primary requirements of a good felting wool are: (1) A large number of fusiform cells with extremely thin and elastic walls which respond very readily to the influence of water and permit of its free absorption into every portion of the fibre. (2) The cells must be small so as to impart the necessary flexibility and elastic nature to enable the fibres to readily intermingle and mat together. (3) Its constitution must be more of the nature of gelatine than horn, so that when submitted to the action of hot water, assisted by acids and alkalies, the cell walls are softened and the fibres readily adhere. It is a well-known fact that under these conditions the felting capacity is very materially increased, and as seen in the cases of hard felt, appears to be almost without limit. If, however, it is solely dependent upon the interlocking of the individual serrations, it is hard to understand how this can be, since it is impossible for the points of the scales to penetrate beyond the cuticle, which, therefore, limits the extent of felting and shrinkage. In the first instance, two essential features must be borne in mind—viz., the presence and influence of moisture, and the shrinkage which always results from the felting. To ignore these is to miss the crucial part of the problem, because their

universal presence in every instance shows that they are intimately connected with the process. Further, so far as microscopic investigations have proceeded in this direction, it would appear that when the fibres are saturated with hot water the imbrications do not readily lend themselves to interlocking, owing to the tips of outer cells or scales becoming soft and swollen and bending more towards the shaft of the hair. Under these circumstances it is difficult to see how they can penetrate between each other. Further, since extreme felted goods are obtained by using a hot acid solution, which greatly facilitates the operation, this places another obstacle in the way of Youatt's conclusions, because since both acids and alkalies act upon wool, especially when they are heated, gradually dissolving the cells, we must admit that the exterior of the fibre will be the first to be injured, thus removing the serrations, which ought, therefore, really to prevent any felting taking place, whereas it becomes more pronounced. To what, then, can the property be assigned ? In the first place, I am inclined to regard it more as a chemical than a mechanical phenomenon, owing to the fact that however much we may agitate and entangle perfectly dry wool, it never becomes felted in the true sense of the term. We know that absolutely dry wool fibres have no attraction for each other. Every fibre naturally repels its neighbour, being what is termed " electrically negative " ; but this disappears as moisture is added, until they begin to attract each other or become " positive." This is well known to most carders and spinners, and so strong is the attractive force that the greatest difficulty is experienced in drafting wool containing an excess of water. The combined action of hot water and acids causes the cell walls to soften, change in form, and adhere more closely together, this becoming more pronounced where pressure is applied as well. Under these circumstances the cells and fibres lose their individuality and become practically fused together into a more or less homogeneous mass.

Thus wool, the product of the sheep, forming as it does the basis of the Worsted and Woollen industries, becomes surrounded with especial interest, since its characteristic and peculiar features must influence and determine the nature of the processes to be adopted for the purpose of manufacturing it into articles for clothing purposes. Its qualities and properties must be understood in order that they may be preserved and impart to the finished cloth those features which make wool so valuable. Hence a knowledge of its properties and qualities is essential if the wool is to be utilised to the best advantage. Ignorance of these properties very often results, especially in the early stages of manufacture, in the wool being completely spoiled.

PART II.

CLASSIFICATION, WASHING AND DRYING.

CHAPTER VII.

CLASSIFICATION OF WOOL.

58. *Saxony and Silesia.* 59. *Australian Wools.* 60. *Cape.* 61. *Natural Coloured Wools.* 62. *American Wools.* 63. *Mohair, Alpaca, &c.* 64. *English, Scotch, Welsh and Irish Wools.* 65. *Typical Wool Varieties Illustrated.*

THE various kinds of wool used in commerce are usually known either by the name of the district or country in which they have been grown, or that of the breed of sheep which has produced them. Thus the Merino wool is obtained from sheep bearing that title, while the Irish, Scotch and Welsh wools are obtained from Ireland, Scotland and Wales respectively. When we remember the wide geographical distribution of sheep, and the consequent diversity which must exist in the conditions under which they live, we shall not be surprised at the great variation which is found among wools in general. No part of the animal is more susceptible of modification, through the influence of external circumstances, than the epidermis and its appendages. Food, climatic conditions, physical surroundings, together with the nature of the soil, are primary factors in producing these changes. So power-

ful is the influence which they exert that the character of the wool may be completely changed by removing the sheep fom one district to another where different conditions prevail. We frequently find tracts of country in close proximity to each other yielding wools which are essentially opposite in their characteristic features, as may be seen within a comparatively small area of Great Britain. This diversity is desirable. It enables the manufacturer to produce a wide range of fabrics suitable for a variety of purposes. The gradation from one extreme to the other is so gradual, extending as it does over a large number of races of sheep, that any rigid system of classification would be impossible. The different breeds of sheep have been very aptly compared to the keyboard of a piano, where each has its octave of qualities. An adequate conception of their relationship can only be obtained by a comprehensive comparison of all the wools with each other.

58. Saxony and Silesia. A short description of some of the chief classes of wool will assist in realising how far they agree and to what extent they differ. Among the wools of the world, those produced in Saxony and Silesia occupy the premier position. For general qualities, fineness and regularity of fibre, they are unequalled. They are both wools of excellent clothing properties, the fibres are full of serrations, the staple is short, strong, and elastic ; they felt readily and possess a good colour. They are both suited for the finest and best woollen fabrics, such as doeskins, dressed face fabrics and felt cloths.

In these districts much care and attention have been bestowed upon the selection of suitable animals for breeding purposes. Darwin tells us that " in Saxony the importance of the principle of selection in regard to the Merino sheep is so fully recognised that men follow it as a trade. The sheep are placed on a table and are studied like a picture by a connoisseur. This is done three times

a year at intervals of months, and the sheep are each time marked and classed, so that the very best may ultimately be selected for breeding purposes. This rigorous weeding-out of defective aimals, together with the favourable conditions under which they are reared, accounts for the high standard of excellence which the wool attains from these sheep.

59. Australian Wools. The Australian Colonies furnish wools of a very superior character; in fact, some of the finer varieties are only rivalled by the very choicest clips from Saxony and Silesia. They are capable of being spun to very fine counts, and are used both for carding and combing purposes. They are generally strong in the staple, of a fair elastic nature, and possess numerous serratures and curves, together with a good colour, combined with excellent milling properties, thus constituting some of the most useful wools of commerce.

Port Philip possesses many useful characteristics. The chief are :—fine fibre, medium length, good colour, sound staple, and excellent spinning and milling properties. It is used for the finest fabrics in woollens and worsteds.

Sydney possesses a fine fibre, medium length, good milling properties, but is deficient in colour, hence it is not suitable for fabrics of a light shade. It is used for fine-faced goods.

Adelaide is moderately fine in fibre, milling properties moderately good, staple not of uniform length, and colour not good. It is used for woollens and worsteds.

New Zealand is of a medium fineness and length, its colour and milling properties are very good. It is often used for blending with wool substitutes, and is suitable for the production of woollens or worsteds.

60. Cape. *Cape* is a fine short fibre, colour fairly good, deficient in strength and elasticity ; it is not a good

milling wool, and is therefore used for shawls and other fabrics, where felting is not essential.

Eastern Cape contains many kemps.

61. Natural Coloured Wools. Some classes of East Indians, Egyptian, Spanish and Alpaca possess a fawn-grey, or brown colour, and are often spun into yarn and made into cloth in their natural shades.

62. American Wools. Other wools deserving of notice are those obtained from America, both North and South. The large tracts of well-watered virgin country, with their undulated surface, furnish some of the best sheep-rearing districts in the world. They do not reach the standard of excellence exhibited by Australian wools, being generally somewhat deficient in strength and lacking the property of elasticity which is so desirable. Chili and Buenos Ayres wools are very dirty, and the latter especially contains large quantities of burrs.

63. Mohair Alpaca, &c. *Mohair* is the beautiful fine soft silken fibre which forms the covering of the Angora goat, a native of Asia Minor. The annual yield of the wool when cleaned is about $3\frac{1}{2}$lb. The length of the fibre varies from 6 to 8 inches. It may be considered a true wool because of its wavy structure and the development of its fine cuticle cells, together with its high reflecting lustrous properties.

Mohair is largely used in the manufacture of lustrous dress fabrics, coatings, astrakans and fabrics covered with short curls. It is also extensively used in the making of plush goods and imitations of skins and furs of animals. The pile or nap of mohair plush possesses properties which enable it to stand erect and when dyed, it so closely resembles the seal or beaver that it is difficult to distinguish it from the genuine article. The fibre lacks felting properties, inconsequence of which it is seldom used alone for manufacturing purposes.

Alpaca. This class of wool is from the animal bearing the same name—a native of South America. The wool is remarkable for length and fineness, it possesses a silky appearance and a lustre almost metallic. The fibre occupies a position between wool and hair, it has, however, none of the essential features of hair, as the cuticle scales are closer to the stem of the fibre ; its length is about 8 inches, if sheared annually, but if left to grow, its length reaches from 20 to 30 inches. The fibre is not so curly as the wool of the sheep, but fine and strong in proportion to its diameter. The colour varies very much.

Camel Hair is usually of a light brown colour. The finer fibres are extracted by the process of combing and used in conjunction with wool.

The coarser fibres are generally used with carpet wools.

64. English Scotch, Welsh and Irish Wools. These wools may be divided into three groups : (*a*) Long wools, comprising the Leicester, Border Leicester, Yorkshire, Cotswold, Lincoln, Romney Marsh, and Devon ; (*b*) Short wools, which include South Down, Shropshire, Oxford, Hampshire, Suffolk, and Ryeland ; (*c*) Mountain breeds, represented by the Cheviot, Scotch Blackfaced, Herdwick, Welsh, Exmoor and Dartmoor, Limestone, Penistone, Shetland and Irish.

Lincoln.—The Lincoln is certainly the typical form of long wooled sheep. Reared in the marshy districts of Lincolnshire, they naturally produce a heavy fleece, celebrated for length and strength of staple and the lustrous nature of its fibres. A frequent weight of a ram fleece is 24 to 26 lbs., while the average clip of a flock ranges from 10 to 14 lbs. per fleece. Its length is usually from 10 to 18 inches, though sometimes the longest portions of the fleece reach an abnormal length.

Leicester.—The Leicester, which owes its origin to Mr. R. Bakewell is perhaps the most widely distributed

of all the long woolled varieties. Yielding a fleece which averages from 7 to 8 lbs., it is neither so long, nor does it possess the strength of the Lincoln, while for softness and lustre it is also inferior. It is, however, a very useful wool, being fine in the hair and of good colour.

Romney Marsh.—This is peculiar to the reclaimed land on the coast of Kent, and is remarkable for the fineness and lustre of its wool. The staple attains a fairly deep growth, and the weight of the fleece averages about 9 lbs.

South Down.—Of short wool this is by far the most valuable. The hair is fine, close and wavy, though somewhat harsh, owing to the action of the lime derived from the soil, which becomes entangled in the fleece. Being defective in milling quality, much of the longer kinds are used for worsted goods, while the shorter are utilised for the production of flannels, etc. The weight of the fleece averages about 4 or $4\frac{1}{2}$ lbs.

Shropshire Down.—These are rather heavier in the fleece than the South Down. The wool is of superior quality, fine in the fibre, and of good length. The average yield of a Shropshire flock is quite 7 lbs. per fleece.

Mountain Varieties.—In this class the *Cheviot* may be taken as the representative type. They produce about $4\frac{1}{2}$ lbs. of wool of medium length, soft to the handle, strong and regular in the staple, and of good colour. The wool felts well, and is used for both carding and combing.

Herdwick Wools.—The Herdwick variety is of ancient British stock. Its wool varies from 8 to 13 inches in length ; the fibre is coarse, poor in lustre and colour, contains many kemps and black hairs. Its average spinning capacity is about 32s. The sheep abound in the fells of North Yorkshire, Cumberland and Westmoreland.

Blackfaced Variety.—The name is derived from the colour of the face and legs of the sheep, which are nearly black. The sheep are indigenous to the rough hilly districts of Scotland, Shetland Isles, Wales and other similar districts. The wool is 8 to 12 inches long, coarse, kempy and though soft to the handle, it is nevertheless hairy and almost devoid of serratures. It is used in the manufacture of towels, open textures and carpets.

Welsh Wool lacks waviness of character and fineness of hair. It is largely used in the manufacture of Welsh flannels.

"Lambs," "Hogg," and "Wethers." The first shearing is usually known as "lamb's," hogg, or "hoggett" wool according to the time it has been allowed to grow. The term lamb is applied to the young, during the period of suckling; and if it is shorn before being weaned, the fleece is called a lamb's fleece. It is therefore of about six months' growth. After weaning, and until shearing—assuming it has not been previously shorn as a lamb—the young sheep is termed a "hoggett" or "hogg" Its wool is of a superior quality, soft to the handle, of good length—being generally from fourteen to eighteen months' growth—fine wavy and elastic in the fibre. It is the most valuable recognised by the pointed character of its staples, and the tenacity with which the latter cling to each other. When one is pulled out of the fleece, it invariably brings with it a portion of the adjoining staples. All succeeding clips are designated "wether" fleeces. The ends of the staples are more or less square, the wool generally is coarser and less elastic than hogg wool, and its individual staples may be easily pulled out without disturbing its neighbours.

65. Typical Wool Varieties Illustrated. The relative length of "staple" and general appearance of a few of the numerous varieties of wool now grown throughout the world are illustrated by the photographic reproductions on Plate 1.

1. Port Philip lamb's wool; 2. Port Philip sheep's wool; 3. Saxony-Merino; 4. American-Merino; 5. Adelaide wool; 6. Swan River; 7. Buenos Ayres; 8. Cape Mohair; 9. Australian cross-bred wool; 10. English wool—Northern Counties; 11. English—Kent.

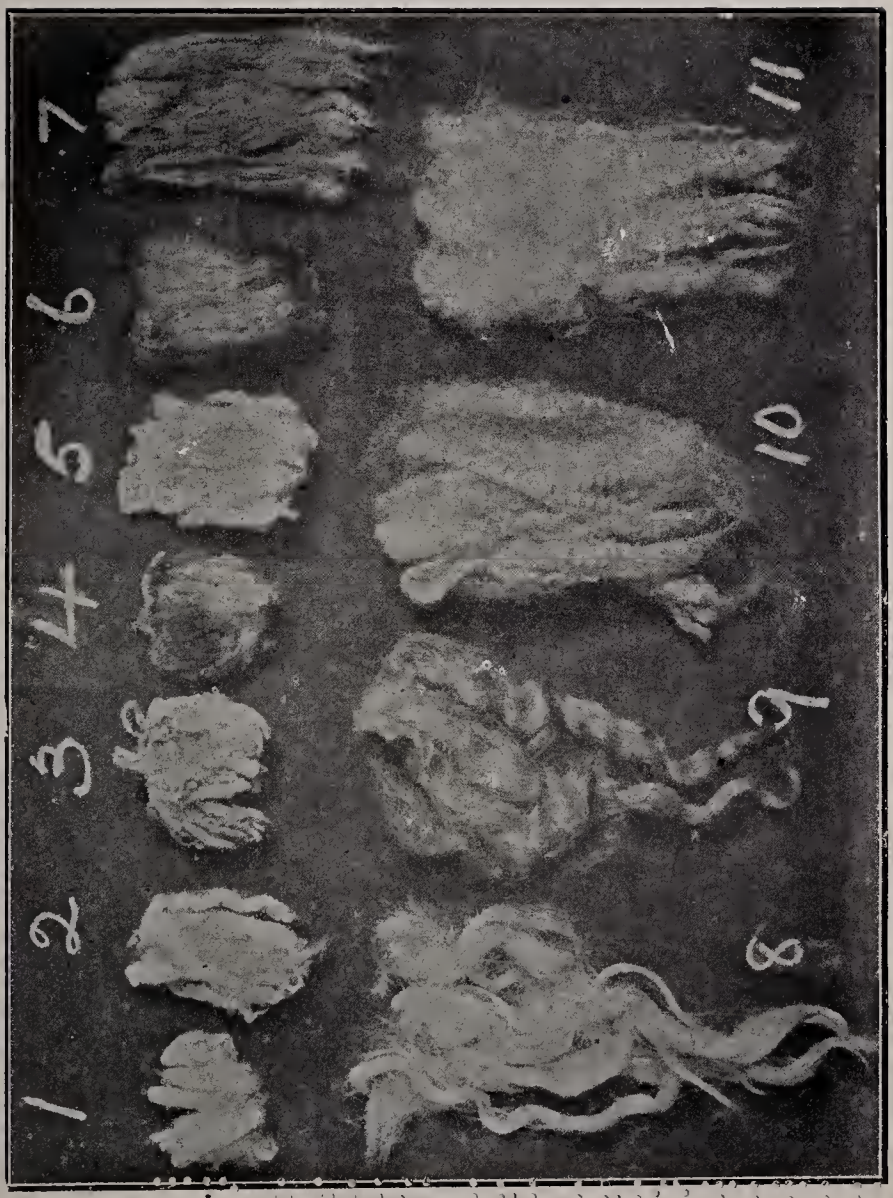

Plate I.

CHAPTER VIII.

WOOL SORTING.

66. *Qualities of Wool in a single fleece.* 67. *Wool Sorting operation.* 68. *Denomination of Qualities of Sorted Fleece.* 69. *Spinning Capacities.* 70. *Graphic Division of Fleece into its possible Qualities.* 71. *Difference of Fibre in Same Fleece.*

66. Qualities of Wool in a Single Fleece. In order to produce a yarn uniform in thickness, weight and strength, it is essential in the first instance that the material from which it is made shall be as uniform as possible both in the length and diameter of its fibres. In the case of wool this is scarcely attainable in practice. Some portions of the fleece will spin to much higher counts than others, hence in order to use the wool to the best advantage, it is necessary to separate the fleece into its respective qualities.

In the earlier days of manufacturing this was more extensively practised than it is at present. When only the English wools were available it was necessary in order to produce fine yarns, to select the most suitable part of the fleece and then only a very limited range of counts could be spun. According to James' history of the "Worsted Industry," 36's represented the approximate limit.

The extended cultivation and improvement of the "Merino" and its different crosses in Australia and other countries have resulted in a very wide range of wools, which improved machinery has enabled us to utilise for worsted yarns. The gradation of the different

types is so imperceptible that it is almost impossible to tell where one begins and another ends, and any of the standard qualities into which the English fleeces were divided may be readily matched from Colonial supplies, so that the necessity to carefully separate a fleece to obtain a certain quality has disappeared, and " sorting " in the old sense is only practised in the case of English and the longer kind of cross-bred, and even then not to the same extent. When the wool reaches the sorter it is packed in bales or sheets, the former being usually adopted for foreign and Colonial produce, and the latter for English or home wools.

67. Wool Sorting. Operation. After opening the fleece the sorter divides it into halves by separating it down the centre of the back, or, as he terms it, the " rig " (*a*, *b*, Fig. 19). Having done this, he next removes any cots, lumps, tar, or vegetable matter which may be present, and then he is ready to commence the work of analysis. To do this properly requires not only considerable practice, but also careful judgment and training of the powers of seeing and feeling, in order to determine the relation of the various qualities, because scarcely two fleeces from the same flock of sheep will be found to agree as to their lines of division. The length and strength of staple, fineness of fibre, together with their position in the fleece, serve to indicate the relative value of the different classes ; but the sorter is also guided by the softness or " handle " of the wool in making the separation. With the half fleece stretched out on the sorting board, and the tail end towards him, he commences operations by skirting it or taking off the outside edges or " belly bits," which are usually known as " brokes," and which are the lowest quality of the fleece. From the root of the tail and vicinity of the legs the " britch " is obtained, where the fibres are coarse and collected into large locks. Next he tears off the wool from the side and back, which may

be made into one or two classes, according to the counts to which it is to be spun. We have now only the shoulder and lower portion of the neck remaining, which are usually classed together as one quality.

68. Denomination of Qualities of Sorted Fleece. A general idea of the individual variation may be obtained by examining the fleece, where it will be found that—

1. On the shoulder and sides.	Best portion of fleece; it has length, strength, softness, fineness and uniformity of quality.
2. Lower part of back	Good sound quality, not quite so soft nor fine as that from shoulder or sides.
3. Loin and back.	Comparatively short staple, fibre not so fine, sometimes inclined to be tender and sandy.
4. Neck.	Somewhat finer than from shoulder, often faulty and irregular, shivey, of thinner growth, lighter in condition and frequently kempy.
5. Centre of back.	Inclined to be tender, sandy, average staple, but loose and open.
6. Upper part of legs.	Length of staples moderate, inclined to looseness, rather coarse, generally sound, liable to contain vegetable impurities.
7. Belly.	Short, dirty, poor quality, generally tender, burry and shivey.
8. Tail.	Coarse, strong and glossy, often run with kemps and stained.
9. Low part of legs.	Straight. bright and hairy, coarse, dirty and burry.
10. Head, chest, throat	Stiff, straight, coarse, kempy and shivey.

The parts out of different fleeces which match or are like each other are termed "matchings." To these, expressive names are given. *e.g.*, The English and the longest cross-breds are denominated :—

Super.	Very finest part of a demi-lustre fleece.
Fine.	The best part or shoulder of an extra fine lustre fleece, generally 40's to 44's quality.
Blue.	Shoulders of an average lustre fleece, Lincoln or Leicester; about 36's quality.
Neat.	Sides of an average lustre fleece; 32's to 34's quality.
Brown.	Mostly from the flank; 28's to 30's quality.
Britch.	Wool from the thighs and root of tail; in a good bred fleece, 26's to 28's quality.
Cowtail.	Britch of a very low lustre fleece; 20's to 24's quality. This is the lowest matching sort.

In addition to the above there are two finer qualities from the Down fleeces, viz. :—

"*Extra Diamond.*" The best part of shoulders; about 56's quality.

"*Diamond.*" Sides; 50's quality.

69. Spinning Capacities. When the wide area from which the wool is obtained is considered, the varied climatic conditions under which it is grown, and the numerous breeds of sheep which produce it, we can understand the wide range of qualities.

Thus in the chief *English* breeds we have :—

South Down	...	...	ranging from	56's	to	44's
Shropshire	...	...	,, ,,	54's	,,	42's
Dorset Horn	...	...	,, ,,	52's	,,	40's
Hampshire	...	...	,, ,,	52's	,,	40's
Cheviots		...	,, ,,			
Border Leicesters		...	,, ,,	50's	,,	36's
Romney		...	,, ,,			
Cotswolds		...	,, ,,			
Midland Counties		...	,, ,,	46's	,,	32's
Leicesters		...	,, ,,	42's	,,	26's
Lincolns		...	,, ,,	42's	,,	26's

The *Colonial* breeds are as follows :—

Tasmanian	ranging from	160's to	84's
Victoria	,, ,,	140's ,,	80's
New South Wales—fine	,, ,,		
Mudgee	,, ,,	140's ,,	80's
New England	,, ,,		
Young	,, ,,		
New South Wales—	,, ,,		
Medium and strong	,, ,,	84's ,,	50's
Merino	,, ,,		
Queensland	,, ,,	84's ,,	50's
South Australia	,, ,,	80's ,,	46's
West Australia	,, ,,	80's ,,	46's

The *European* and *American* are as below :—

Silesian	ranging from	190's to	90's
Saxony	,, ,,	160's ,,	84's
Spain	,, ,,	140's ,,	84's
France	,, ,,	130's ,,	60's
North of France... ...	,, ,,	84's ,,	60's
American	,, ,,	80's ,,	56's
Argentine	,, ,,	76's ,,	56's

70. Graphic Division of Fleece into its possible qualities.

At Fig. 19 is given a diagrammatic representation of a Lincoln hog fleece as it lies before the sorter. E are the "skirtings" or "brokes"; D the "britch," which will spin to about 24's; C, from the flanks, may be spun to about 32's; B, from the side, to 36's; while A, from shoulder and neck, will make about 40's or 42's. It is somewhat regrettable that a general uniformity does not exist in the terms by which these different parts of the fleece are known in various parts of the country. In adjacent towns, and frequently in neighbouring firms, we find special names used to designate the qualities. Sometimes they are called by numbers, as 1's 2's 3's, etc., or letters may be used in conjunction with the figures, thus: 2's A, 4's A, and so on, or 4's quality and 5's

quality. Again, distinctive names as described above are sometimes employed. The relative proportion of

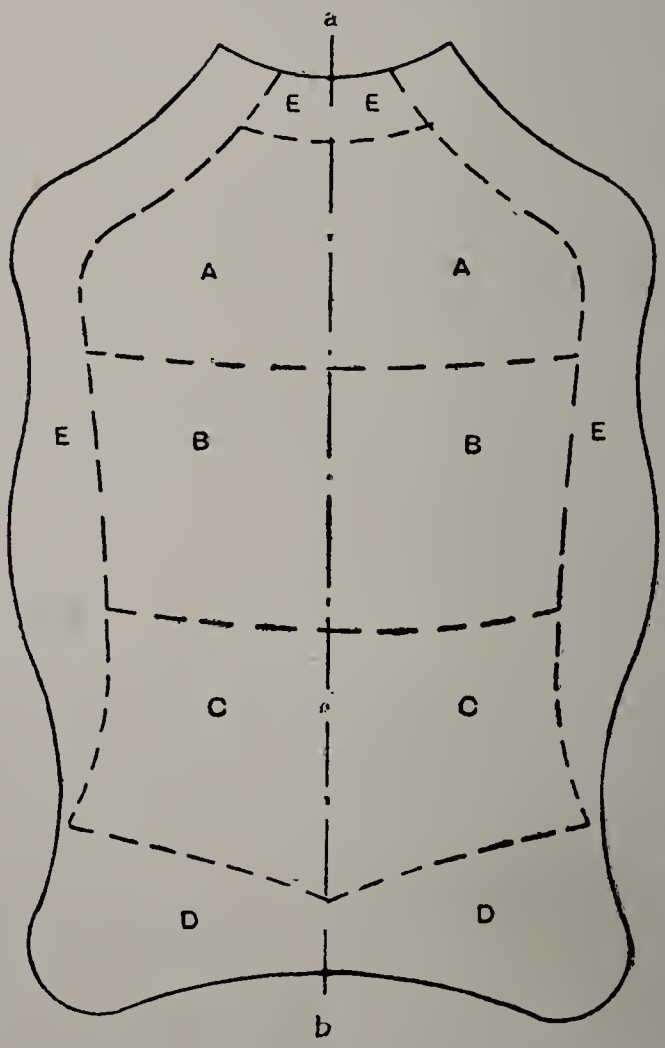

Fig. 19.

these qualities in different kinds of wool, as ascertained by Dr. Bowman, is given below :—

		Lincoln Hogs	Leicester Hogs	Irish Hogs	Half-bred Leicester Hogs	Northumberland Hogs
Fine matching	combing	17·57	33·90	34·90	19·59	37·6
Blue ,,	combing	149·03	139·93	144·53	110·90	137·8
Neat ,,	combing	45·37	44·18	40·46	79·75	43·4
1st brokes	carding	5·80	5·19	4·87	5·02	4·9
2nd ,,	carding	7·31	5·03	5·76	7·99	3·9
3rd ,,	carding	2·67	2·68	3·54	4·25	4·5
Britch		7·99	6·00	4·49	7·50	4·8
Cowtail		1·31	0·37	0·60	2·04	2·1
Cots		0·31	1·76	1·24	0·31	—
Grey		0·03	0·02	—	0·64	—
Topping		1·45	0·65	0·50	1·77	0·5
Dead Waste		1·16	0·30	0·12	0·24	0·5
		240·00	240·00	240·26	240·00	240·00

Of course the quantity obtained from a fleece of any particular quality must always be variable because there are probably no two sorters who would agree in dividing the same fleece in a similar way, the object aimed at being to obtain a parcel of wool having a general uniformity in its characteristic features. Much may be done towards attaining this by a careful classification of the fleeces after shearing, as is done in many of the Colonial wools, which are simply skirted after they reach the maufacturer, and the most burry fleeces placed together ready for clearing, while the remainder is classified according to the counts to which it will spin, such as 60's, 70's, 80's, etc.

71. Difference of Fibre in Same Fleece. A reference to Figs. 20 and 21—from Dr. Bowman's monograph on the wool fibre—will give some idea of the difference which exists in the wool taken from different parts of the same fleece. In Fig. 20, which represents fibres

of fine Lincoln wool, A and B are from the shoulder, while C and D are from the britch. A marked difference will be observed in their relative diameters and the distinctness of the serratures. In Fig. 21 fibres are shown taken from corresponding parts of a South Down fleece, but in this case the dissimilarity is not so apparent, a greater uniformity seeming to obtain. Still, the britch fibres exhibit a tendency towards coarseness.

The primary and most important factor is that the sorter must be very intimately acquainted with the requirements of the purpose for which the wool is intended. A north light is the most suitable, because being reflected and well diffused it is the most uniform, and since it contains no direct sunlight it is not too yellow.

The sorting tables are about 7 ft. by $3\frac{1}{2}$ft. with a partition at the ends and are arranged along the sides of the room under the windows.

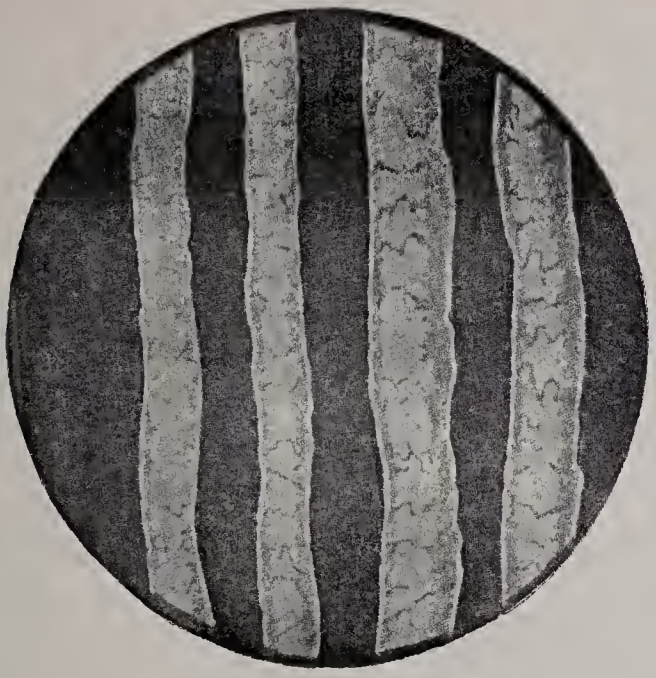

Fig. 20,

Fig. 21.

CHAPTER IX.

WOOL SCOURING AND WASHING.

72. Object of Wool-Washing. 73. Suint and De-Suinting. 74. Wool Scouring. 75. Water and its Impurities. 76. Detergents. 77. Action of Soda on the Wool Fibre. 78. Soap Recipes. 79. Analysis of Soap. 80. Temperature of the Scouring Solution.

72. Object of Wool Washing. AFTER the wool has been sorted into its respective qualities, the next process through which it passes is that of scouring or washing. It has been previously shown that wool has naturally associated with it certain impurities which it is necessary to remove before it is used for manufacturing. The object of washing or scouring therefore is to remove as far as possible, the impurities naturally present. They consist chiefly of the accumulated secretions and excretions from the skin, of which yolk, a peculiar oily substance, is the principal constituent. Upon the thorough cleansing of the wool the success of all the subsequent operations is dependent. Imperfectly-washed wool is a source of trouble, annoyance and expense at every stage of its manufacture. It will not dry evenly and does not spin well owing to interaction of the serratures being prevented and the fibres continually clinging to the rollers and other parts of the machinery over which they have to pass. Its effect is seen also in the woven fabric, which lacks the softness and suppleness of one made from properly-cleansed wool. It cannot be too strongly insisted upon that the greatest care should be exercised in the process of scouring for strictly speaking it is a chemical operation and that generally substances

are employed as detergents which act very energetically on wool ; negligence or ignorance may produce disastrous results. In fact, the properties and peculiarities of the wool may be completely altered by inattention to the influence which certain substances and conditions have upon it.

The impurities may be classified under three heads, viz. : (1) Suint, a substance soluble in cold water ; (2) Insoluble wool fats ; and (3) Earthy matter.

73. Suint and De-Suinting. Suint is a valuable bye-product. The ash of yolk, as recorded by Maumè and Rogelet is expressed by the following analysis :—

Potassium	Carbonate	86·78%
,,	Sulphate	6·18%
,,	Chloride	2·83%
Silica, Phosphorus, Lime, Iron, &c.		4·21%
		100.

See also pages 35 and 36.

From the above figures, it will be seen that the potash salts contained in the yolk are of considerable commercial value.

The suint may be removed by a preliminary steeping in cold water, which may subsequently be calcined so as to obtain the Potash salts, comparatively free from extraneous substances. Numerous mechanical devices have been conceived and practised on the continent of Europe and by a few English firms, for de-suinted natural wools.

The advocates for de-suinting greasy wool before scouring assert that a saving of $7\frac{1}{2}$ to 10% of soap is realised in the subsequent scouring process.

The inherent defect of de-suinting is the tendency to cause the wool to mat or felt in the process.

With de-suinted wool a considerable quantity of sand and undissolved foreign matter is frequently and tenaciously mixed.

74. Wool Scouring. Various materials are used to depurate the wool, but they may be grouped under two heads, according to the manner in which they accomplish their work. In the first, are such agents as soda, potash, ammonia, silicate of soda, etc., which cleanse the wool by saponifying the grease and fatty matter, forming an emulsion which is easily removed by water. The second group consists of volatile liquids, such as ether, carbon bisulphide, naphtha, alcohol and similar substances which owe their cleansing properties to the power they possess of dissolving out the fatty impurities. The relative merits and demerits of these two systems will be considered after having dealt with the substances employed.

Whatever detergents are used, it is absolutely necessary that they should be perfectly free from anything which is likely to injure the physical properties of the wool, for the object of scouring is not to depurate the wool at all hazards, but to remove the extraneous matter in such a way as to preserve intact all those qualities which make wool so valuable. It is of primary importance, therefore, to see to the purity of the substances used. In the alkaline system of scouring—that is, where soda, potash, etc., are utilised—large quantities of water are used as a vehicle for bringing them in contact with the wool. Now water is capable of dissolving and holding in solution a large number of substances which are easily precipitated by soda or potash. This fact renders it necessary to have water for scouring purposes free from dissolved matter, in order that the whole of the alkali may be available for scouring purposes.

75. Water and its Impurities. It will perhaps be well to glance briefly at the impurities of water as they affect the manufacturer, because their presence involves a large increase in the quantity of soap or alkali used, as well as being injurious to the wool.

Water used for manufacturing may be derived from three sources —viz., from wells, springs, or rivers, all of these waters being liable to contain substances in solution. The solvent action of water is very great, and flowing as it does over the surface of the soil until it reaches some channel, or sinking in and percolating through the soil until it reaches strata of rock or a bed of clay which arrests its progress, it is continually dissolving a part of the minerals and carrying them away in its passage. The nature of the impurities will be governed by the character of the rocks and soil over which the water flows. If the strata are crystalline, of igneous origin, the water will be comparatively pure, owing to the hardness of the rocks resisting its solvent action. On the other hand, if the rocks be of a limestone or chalky character, it will dissolve large quantities of these substances. Again, should the soil be composed chiefly of decaying organic matter—as, for instance, peaty soils,—then organic acids will be found in solution.

Impurities may be of two kinds, either suspended or dissolved. The first consists chiefly of earthy and vegetable matter, and may be removed by filtration, or the water may be run into tanks and the solid particles allowed to settle. The second, however, is far more difficult to remove, the means usually adopted being to add some substance which will combine with those held in solution, and thus produce an insoluble compound which may be filtered off. Water containing matter in solution, such as lime and magnesia, is known as hard water, in contradistinction to that which is pure or soft ; and the degree of hardness may be arrived at by using a standard solution of soap and observing the quantity which it requires to render it neutral or soft.

For precipitating dissolved impurities, the fixed alkalies, soda or potash are often employed because they readily combine with the dissolved impurities, and here it will be seen in what degree hard water affects the

wool washer. When the detergents are added to the water in which the wool is placed, they first of all combine with the lime, etc., forming an insoluble lime soap, which becomes deposited on the wool and adheres very tenaciously to the fibres, preventing the dyes, when the wool is dyed, from penetrating into the interior of the cells. It also fastens the scales or serratures down to the shaft of the hair, thus removing as it were, the points of resistance upon which the successful spinning of the wool depends. The presence of these substances may be readily detected by adding a few drops of a solution of ammonium oxalate to a little of the water, when a white precipitate will be formed.

If on the addition of a few drops of hydrochloric acid and barium chloride to a small quantity of water it becomes milky, owing to the formation of a finely-divided precipitate, the presence of soluble sulphates is indicated, such as magnesium sulphate, calcium sulphate, etc. The presence of soluble chlorides, calcium and sodium chlorides, etc., may be ascertained by adding nitric acid and silver nitrate, which produce a dense white precipitate. Organic matters may be detected by the change in colour which is produced in a solution of permanganate of potash when it is added to water in which these are present.

For scouring purposes, when it can be procured in sufficient quantities, condensed water is undoubtedly the best, as its freedom from foreign matters enables the whole of the detergents to be utilised for cleansing purposes.

76. Detergents. Given pure water, the next consideration is the character of the other agents which are used—viz., soap, soda, potash, etc. Probably no two opinions will be held as to the desirability of using a perfectly neutral soap, one in which the de-alkalising has been completely effected so as to free it from any uncombined caustic alkali. Of course, if an attempt

were made to scour wool with a neutral soap, it would in all probability miserably fail, because in the majority of wools an excess of grease is present which will require some alkali to effect its saponification. In some wools examined, the impurities actually gave acid reactions, so that in these instances the scour must be alkaline in order to neutralise the acids. In fact, an alkaline solution may be said to be essential for wool scouring, but this ought to be so made that its alkalinity may be known and regulated. Instead, therefore, of using an alkaline soap which may vary indefinitely, and in addition to this, adding also fixed alkalies, which very often contain some of the substance in a caustic condition, we ought in the first place to select a soap of reliable neutrality, and then render the bath alkaline by the addition of weighed quantities of whatever alkali may be selected. If this method were adopted, then any injurious effects would be reduced to a minimum. The nature of the soap may be easily ascertained by its behaviour with litmus, which assumes a blue tint when alkali is present. Undoubtedly the best alkali to use for scouring purposes is ammonia, because of the mildness of its action. It may be added to the liquor in the form of ammonium—chloride or carbonate. Should it be considered desirable to use a stronger alkali, then the fixed alkalies, soda and potash, are available. Of the two, potash is the more suitable, because this substance is a natural impurity in the wool. The great objection to the use of these substances as detergents is their liability to contain some portion which has not been converted into the carbonate. Under no circumstances ought they to be used in the caustic state, because, as previously observed, in this condition they are capable of completely dissolving wool when assisted by hot water, and it must be remembered that it is the exterior of the fibre which is first attacked, and the delicate serratures, upon the action of which the successful spinning of the wool depends, are the first to be removed. Again, soda

has a tendency to turn the wool yellow and leave it dry, harsh and wild, which probably results from a portion being left in the interior of the fibre.

77. Action of Soda on the Wool Fibre. A reference to Fig. 22 will convey some idea of the action of soda on the fibre. A shows its normal condition, while B shows it after treatment with a dilute solution of caustic soda at a temperature of 60° C. It will be seen that almost the whole of the superficial layers of cells have disappeared, and the longitudinal markings are the walls of the cortical tissue. Precisely the same action takes place when wool is washed in a bath where caustic soda is employed, and for this reason its use should be scrupulously avoided.

78. Soap Recipes. There are many recipes for good washing soaps ; two practical examples are here supplied :—

(1). Dissolve 2 cwts. of caustic potash in 10 gallons of cold water, add 18 gallons of gallipoli oil, stirring well all the time ; allow the mixture to stand for a month or more—the longer the better—then mix the soap with hot water so as to produce a very strong solution, and run two or three gallons into the machine bowls for each washing according to the amount of dirt and grease in the wool.

(2). Add 9 gallons of water to 50 lbs. of caustic potash and stir up once or twice until dissolved ; afterwards add 20 lbs. of cotton seed oil and 20 lbs. of clean melted tallow, stir up gently and leave the mixture to stand for a few days or more.

Manufacturers have almost ceased of late to make their own soaps, because soap manufacturing is now so extensively carried on by specialists who make it largely their sole business.

79. Analysis of Soap. To test properties of any given soaps, the following proportions require to be ascertained: (1) Moisture, (2) Fatty Acids, (3) Total Alkali and (4) Alkali Carbonates.

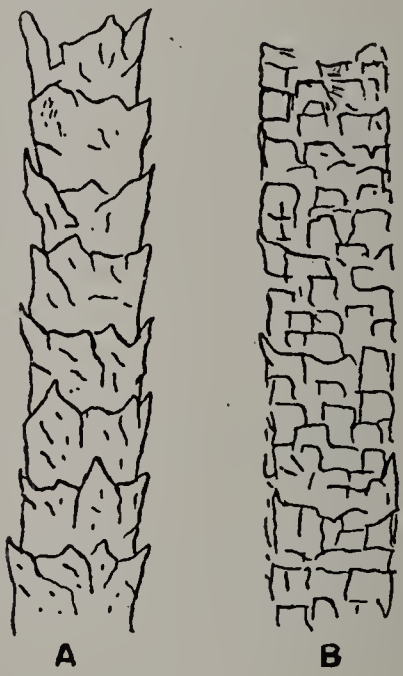

Fig. 22.

(1) To determine the amount of *moisture* in a soap. Take 10 grs. of soap and cut it into shavings; place on a watch glass and dry in an oven for 2 to 3 hours at 104° F. Finally raise the temperature to 230° F. for 4 hours until the weight becomes constant.

The difference in weight represents the direct loss of moisture.

The percentage of moisture in the soap must be calculated on its absolutely dry weight.

Hard Soaps—Cut from the inside and outside as the outside contains less moisture.

Soft Soaps—The sample must be taken from the different portions of the bulk.

(2) To determine the *fatty acids*. Dissolve the residue left after drying in 40 cubic centimetres of water. To this add an excess of sulphuric acid, shake the mixture well with 100 cubic centimetres of ether and allow it to settle. Carefully pour off the ether into another vessel and evaporate it to dryness in a water oven for 2 hours, weigh the residue and the result multiplied by 0·9765 represents the total fatty matter present.

(3) To determine the *total alkali*. Take another 10 grains of soap to be tested, dissolve in water, add a few drops of methyl orange and run in from a burette an excess of normal sulphuric acid ; then add a few drops of Phenol Phthaleim as an indicator and run in a normal solution of caustic soda until a crimson colour is obtained. The result is ascertained by subtracting the volume of normal caustic soda required from the volume of normal sulphuric acid used and the result is calculated as Sodium Oxide for hard soaps and Potassium Oxide for soft soaps.

(4) To determine the quantity of *Free Alkali*. Dissolve 10 grs. of soap in 200 cubic centimetres of alcohol. Filter the solution, then take 50 c.c. and mix it with standard sulphuric acid using Phenol Phthaleim as an indicator. This will give the percentage of caustic soda.

Soap analysis is very difficult and can only be satisfactorily performed by a qualified chemist. The foregoing example is only given for the benefit of those students who have acquired some knowledge of chemistry.

A simple and reliable test of commercial value is as given below :—

Equal quantities of two given soaps are dissolved separately in equal volumes of distilled water. Each solution is then placed in a graduated glass measure and run into definite volume (say 2 ozs.) of a standard hard water until a permanent lather is obtained. The soap

which yields a permanent lather most readily is the better. A lather is said to be permanent if it remains in such condition for about five minutes. This process being simple is frequently used in practice.

80. Temperature of the Scouring Solution. The temperature of the scouring solution is an important though variable factor. It is always advisable to err on the side of coldness rather than excessive heat. No fixed series of the degrees of heat most suitable for the various classes of wool can be given, because even successive clips from the same flock of sheep do not agree precisely in the quantity and character of the impurities which they contain. Careful attention should be given not only to the nature of the substances to be removed, but also to the structure of the particular wool to be dealt with. It will be easy to see that wool which contains a large percentage of yolk, etc., will require essentially different treatment from one in which these are present in only small quantities. Those which are free and open, parting readily with their dirt, etc., may be washed at a low temperature (from about 28° to 44° C.), while wools which are matted and full of grease from 44° to 56° C. ; but on no account ought the heat of the scour to exceed 60° C. The evil which arises from using too hot a scour can scarcely be estimated. It should be borne in mind that when the wool is placed into hot water the cells become distended through the absorption of the water, the detergents are carried into the interior of the fibre, and thus act on every portion of it. So completely do they do their work that all the natural fat and oily substances which ought to keep the wool soft are entirely removed ; the consequence is that the fibres are left dry, harsh and tender. To overcome the defects thus produced, and to facilitate the working of the wool, it has to be oiled in order to impart in some measure the soft handle which has been destroyed. Indifference and inattention at the initial stages of manu-

facture destroy the very qualities upon which the successful manipulation of the wool depends. It is advisable to conduct a series of thermometrical experiments and record the behaviour of the wool at the various temperatures. The scourer too often relies upon the hand to tell him when the bath is hot enough. A careful examination ought to be made not only of the heat required, but also of the quantity of alkali most suitable to produce the best results. From an economical standpoint, if no other, this course should commend itself to those who wash wool, because of the saving which must accrue. The fact that wool begins to decompose at 230° F. or 110° C., should be warning enough against employing too hot a scour.

Superheated steam is capable of breaking up the arrangement of the cells, and causing them to become quite gelatinous. Not only does too high a temperature seriously injure the strength of the fibre, but it also exercises a material influence on its lustre, in fact it is a common occurrence to find a bright-haired wool lose much of its lustre in the washing. Fine wools have a tendency to felt or mat together when placed in too hot water, owing to the shrinkage in length of the fibre and consequent interlocking of the serratures. From these considerations it will be seen that the question as to the temperature at which wool should be washed is of more importance than many imagine. The necessity of preserving the original properties of wool should be rigorously kept in view at every stage of its manufacture, whether mechanical or chemical. Too great a heat of the scour is more injurious than a slight excess of alkali. Experiments show that while at a low temperature, wool suffers little injury, if any, through the presence of alkali, yet if the temperature be slightly raised, the injury becomes very marked.

CHAPTER X.

WOOL WASHING MACHINERY AND PROCESSES.

81. *Hand Washing.* 82. *Modern Washing Machines.* 83. *McNaught's Harrow Type Wool Washing Machine.* 84. *McNaught's Swing Rake Type of WashingMachine.* 85. *Squeezing Rollers and Pressure of Same.* 86. *Petrie's Wool Scouring Machines.* 87. *Petrie's Rake Scouring Machine.* 88. *Petrie's "Harrow" Type of Wool Scouring Machine.* 89. *Petrie's Automatic Self Cleansing Wool Washing Machine.* 90. *Alkaline Scouring.* 91. *Volatile Solvents.* 92. *Comparisons.*

VARIOUS mechanical contrivances are adopted for bringing the greasy wool into contact with scouring solutions. The chief features which distinguish the respective machines are the different methods used for propelling the wool through the sud, the form of settling tank, and the type of squeezing rollers. Before considering in detail the chief types of modern wool washing machines, it will perhaps be advisable to briefly refer to the original system of hand washing.

81. Hand Washing. This primitive method is now only in use in a few remote places. It consists of arranging a series of tanks—five or six in number—and filling all the tanks but the last with a suitable sud, the last is to contain the clean water, which after use, is run into the previous tank to be used with the wool in a less cleansed condition, and similarly this sud is run into preceding tanks until the first is reached, from which the dirty water is run to waste. The dirty wool is put into the various tanks, commencing with the

dirtiest, and agitated with poles or hand rakes to ensure complete saturation. It is then lifted on to a wooden grate or lattice to drain, and subsequently rinsed in the clean water tank to remove the soap and any other remaining foreign matter, after which it is lifted by hand to the squeezing rollers, which operate at some height above the level of the water.

By this method the wool fibres, on being lifted out of the water, manifest a tendency to felt or hang together in close masses, which makes it very difficult to simultaneously remove the sand impurities and superfluous water, the latter only being chiefly got rid of, while the former remain pressed in amongst the closely matted fibres.

82. Modern Washing Machines. All the modern types of machines are designed to squeeze the wool when it is in a full, open and lofty condition. The mechanical contrivance in each system will be dealt with subsequently. The opinion was formerly held, and to a large extent prevails to-day, that to successfully cleanse wool it was necessary to thoroughly agitate it whilst in the scouring liquor, and to pass it through the bowl as rapidly as possible. A later theory and unquestionably, the correct one—certainly the most scientific—is to remove the impurities with the least mechanical disturbance of the wool.

Each type of present day washing machines consists of a large iron bowl provided with a side supplementary or settling tank into which the greasy water from the squeezing rollers accumulates, and a false bottom through which the sand and dirt pass and are thus prevented from rising and coming into contact with the wool again. Each machine is fitted with a set of feed rollers which carry the wool into the machine, a feed sheet, immerser or plunger to immediately immerse the wool, a set of forks or rakes to convey the wool through the sud, a faller plate and a pair of squeezing rollers

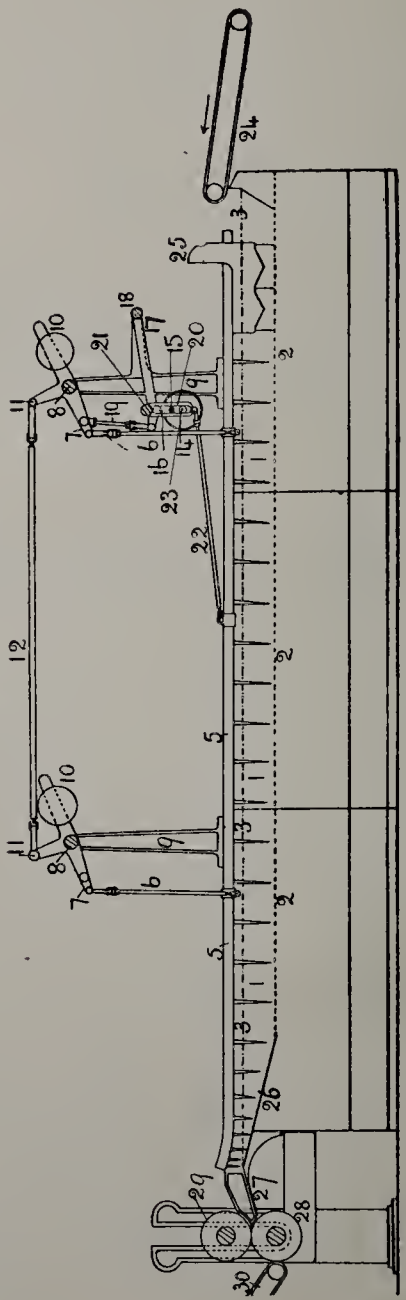
24
3
25
18
17
10
21
15
20
2
11
8
19
9
7
6
16
14
23
22
12
2
5
10
11
8
9
3
7
6
2
5
3
26
29
27
28
30

Fig. 23.

which removes the water. Usually three bowls constitute a set and frequently, in the case of very dirty wools, a steeping tank is used prior to washing proper, or the material is run through a bowl charged with the sud which has been used previously in the first bowl of the set.

83. The Harrow Type Wool Washing Machine.

One of the chief features of this machine is the system of mechanical agitation which is used for bringing the wool in contact with the sud and conveying it through the bowl. The rakes or forks used for this purpose are fixed in a frame which is actuated by an eccentric arrangement. It has a horizontal and vertical motion, moving slowly forward, carrying the wool along until it reaches the end of its traverse, when it rises out of the sud and recedes to its former position, descending into the water again and resuming its journey. It is claimed for this method that it allows the wool to float gently in the scour, and thus ensures its being properly cleansed with a minimum disturbance of the fibre.

Attached to the side of the bowl is the settling tank into which the water is conveyed after being pressed out of the wool by the press rollers. The object of this arrangement is to prevent the earthy matter and scum from again coming into contact with the wool. To facilitate their removal the bottom of the tank is inclined towards the middle, which causes the sediment to accumulate at this point, while at the top, vertical plates are fixed at intervals which extend a little below the surface of the liquor, thus preventing the scum from accumulating near the exit. The sud is drawn off from the tank about half-way up the height of the liquor, which prevents any of the floating impurities or solid particles from re-entering the bowl.

The chief features and principle of this machine are shown at Figs. 23 and 24. The former shows a longitudinal section in elevation and the latter, a transverse

section through the wash bowl and side settling tank. The numerals in each diagram refer to corresponding parts. 1—indicates the position of the water in the wash bowl; 2—the perforated false bottom; 3—the water line and 4—the "cleaner space" which has free communication with the dirty sud below the perforated copper plate. The forks which propel the wool through the sud are supported, at intervals of about 10 inches, to two parallel iron tubes; these tubes are joined together at suitable distances apart so that the forks, tubes and cross bars form one long continuous frame of forks. The position of this frame is shown at 5. The whole framework is suspended by adjustable connecting rods, which rods are attached to the lever arm 7. This lever is fulcrumed at the point 8 in the stationary supporting bracket 9, which stands securely upon the framework of the machine bowl. The lever arm 7 together with its suspended parts are balanced by the weights 10 on lever arm as shown. An adjustable connecting rod 12 joins the arms 11 as illustrated, so that both of the lever arms 7 work together in unison. Duplicates of all the parts from 6 to 12 inclusive are made for the opposite side of the machine so that the frame 5 can be made to rise and fall in a vertical plane, evenly and at will. The parts which produce this vertical motion are a tappet 14 constantly revolving with the shaft 15 which receives positive motion from a spur pinion A secured to the pulley shaft B and gearing into the large spur pinion C fixed on the opposite end of shaft 15 as shown in Fig. 24. When the machine is in motion, an antifriction bowl 16 is kept in rolling contact with the tappet 14; the bowl 16 is carried by lever 17 pivoted at 18; the free end of the lever 17 is connected to the lever arm 7 by the rod 19 as indicated. The alternately horizontal motion imparted to the frame and forks is dependent on the following parts of mechanism. A slotted lever 20 is suspended and free to oscillate about the stud 21; the free end of this slotted lever is joined

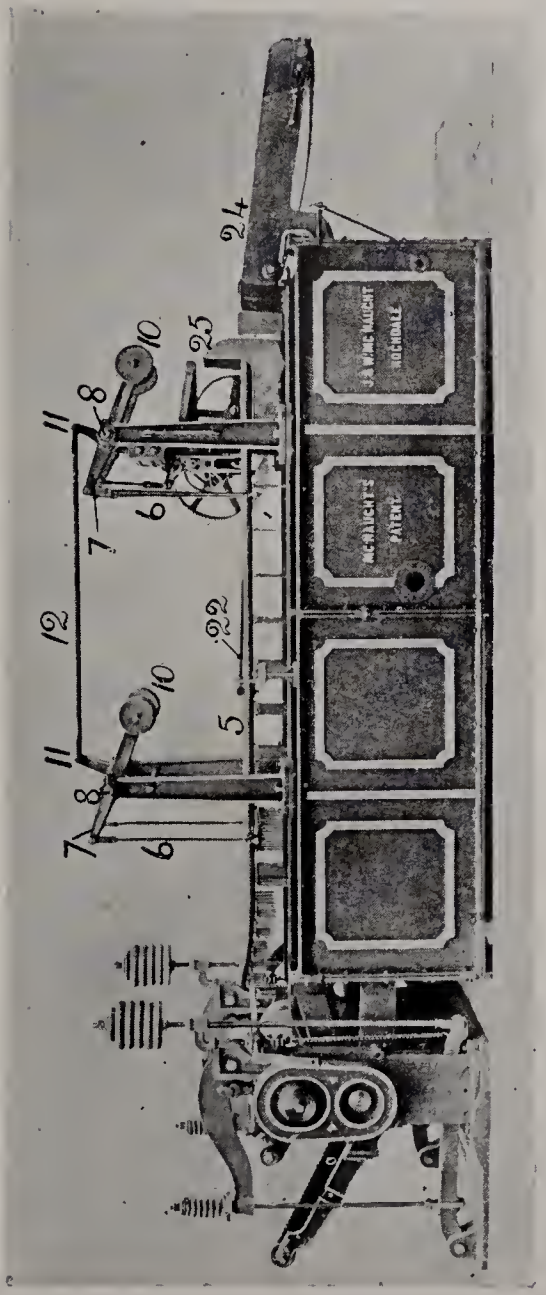

Plate II.

The Harrow Type of Wool Washing Machine.

by means of the adjustable connecting rod 22 to the frame tubing as shown. A short lever rotates with the shaft 15 and the tappet 14 on the same shaft. This rotating lever carries at its free end an antifriction bowl 23 which works in the slot of lever 20 and is therefore free to produce a reciprocating motion in the slotted lever 20 which in turn produces a corresponding motion in the frames and forks 5. The constant rotation of the tappet 14 operating on the antifriction bowl 16 produces the requisite rise and fall in the lever 17 which is transmitted through the connections described to the forks. The combination of the vertical and horizontal motions by means of the tappet and crank as described, imparts to the frame and forks 5 the square motion which in its forward journey moves the forks slowly about 7 or 8 inches in the water carrying the wool towards the squeezing rollers, but upon being lifted out of the water the return journey is made more rapidly to the starting point, from which the operation is continually repeated.

An auxiliary mechanism, not shown in the illustration, has been recently attached to the delivery end of the rakes, for the purpose of distributing the wool more regularly and evenly into the nip of the squeezing rollers, and to obviate any tendency to return down the inclined plane. Briefly, the mechanism consists of a second group of forks, which are supported on the left upright bracket 9, and operate alternately with the delivery end of the main group of forks 5, so that for each forward traverse of the forks in the sud, two forward actions operate on the wool as it ascends the inclined plane.

The feed sheet is shown at 24; the plunger at 25; the inclined plane at 26; the faller plate at 27; the squeezing rollers at 28 and 29, and the delivery sheet at 30. The bases of the machine bowl and side settling tank are inclined towards the outlet valve 31, which immediately upon being opened allows the sand and dirt to be cleared away by the flush of water. An over-

flow pipe, from the side cleaning space 4, communicates with the press trough immediately underneath the squeezing rollers, from which the dirty sud runs by gravity into the side settling tank. The clear sud from

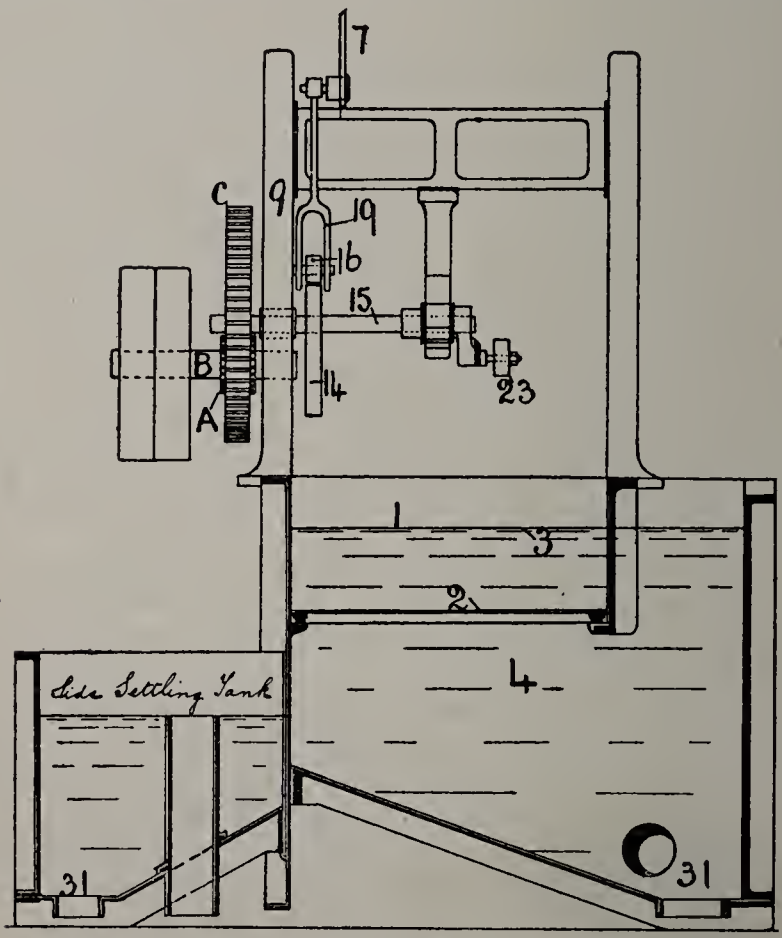

Fig. 24.

this same tank is returned by means of a centrifugal pump into the feed end of each wash bowl, but the temperature is first raised to approximately the same height as that in each respective wash bowl. The action of the above system of forks moving slowly and

gently forward is very suitable for short fine wools of the Merino class and also for the finer crossbreds, since the gentle action does not agitate the scouring liquor and so the natural tendency to felt or mat in these wools is obviated. The flush of water from the wash bowl assists in floating the wool into the nip of the squeezing rollers, which thereby causes some of the sand and dirt to escape into the side settling tank since it cannot run back into the main bowl. A view in perspective of this type of machine is shown at Plate II., and the numbers on same refer to corresponding parts detailed in Figs. 23 and 24.

84. McNaught's Swing Rake Type of Washing Machine.

The illustrations Figs. 25 and 26 are sectional elevations showing the feed and delivery ends of the machine respectively, and Figs. 27 and 28 are plan views of the same respective parts of a McNaught's first bowl machine—two, three or four of such machines constitute a complete modern set ; formerly two bowls with two rakes each and a violent agitation were considered ample for the purpose of washing the wool. The speed of the rakes in the earlier days of machine washing was about 20 strokes per minute, but now it is seldom that one dozen strokes per minute are exceeded. They vary from 6 to 12 and as little agitation as possible should be given, according to the kind of material to be washed and the opinion held by the manager.

The numbers in each of the Figs. 25, 26, 27, 28 and 29 refer to corresponding parts. The various parts and functions of the machine are detailed as follows :— Number 1 indicates the bowl proper ; 2 the outer tank ; 2a the side settling tank ; the dotted line 3, the perforated bottom ; dotted line 4, the water line. The positions of the swing rakes which are used to propel the wool through the sud are shown at 5. These are fulcrumed at 6, and a reciprocating motion is imparted to the rakes by means of the cranks 7 and the adjustable sleeve 8.

The crank 7 is secured to one end of the shaft 9, the opposite end of which contains the bevel 10, which in turn receives motion from the small bevel wheel 11. Each of the small bevels 11 is keyed to the driving bevel shaft 12 which runs the length of the machine. Motion is communicated to the shaft 12 by means of the bevels 13 and 14. The shaft 15 is rotated by the spur wheels 16 and 17, the latter of which is on the small pulley shaft 18, the driving pulleys of which are shown at 19, and these receive motion from the main driving shaft.

A double motion rake frame for delivering the washed wool in a continuous sheet into the nip of the squeezing rollers is shown at 20. The compound motion imparted to this rake is obtained by means of the *tappets* 21, eccentrics 22, lever arms 23 and 24, secured as shown to the rake support and swing lever 25. No. 26 indicates an inclined plane and 27 a faller or delivery plate, the angle of which is an important matter and worthy of careful consideration. Approximately 45° may be taken as a basis for experiment.

85. Squeezing Rollers and Pressure of same. The squeezing rollers are shown at 28 and 29. The bottom roller 28 is secured to the shaft 30, which receives its rotary motion through the pinions 31 and 32, the latter of which is secured to the main driving shaft 34, the driving pulleys for which are indicated at 35. The arrangement for delivering the partly cleansed wool into the nip of the rollers of the second bowl machine is indicated at 36, which is simply an endless travelling brattice. The squeezing rollers are usually covered with rope-like sliver of wool. Recently a patent wool cloth roller has been introduced and adopted which is more durable than the wool wrapped roller. Fig. 29 is a detached detailed elevation of the combined weight and compound lever pressure arrangement for the squeezing rollers. Pressure is applied to the squeezing

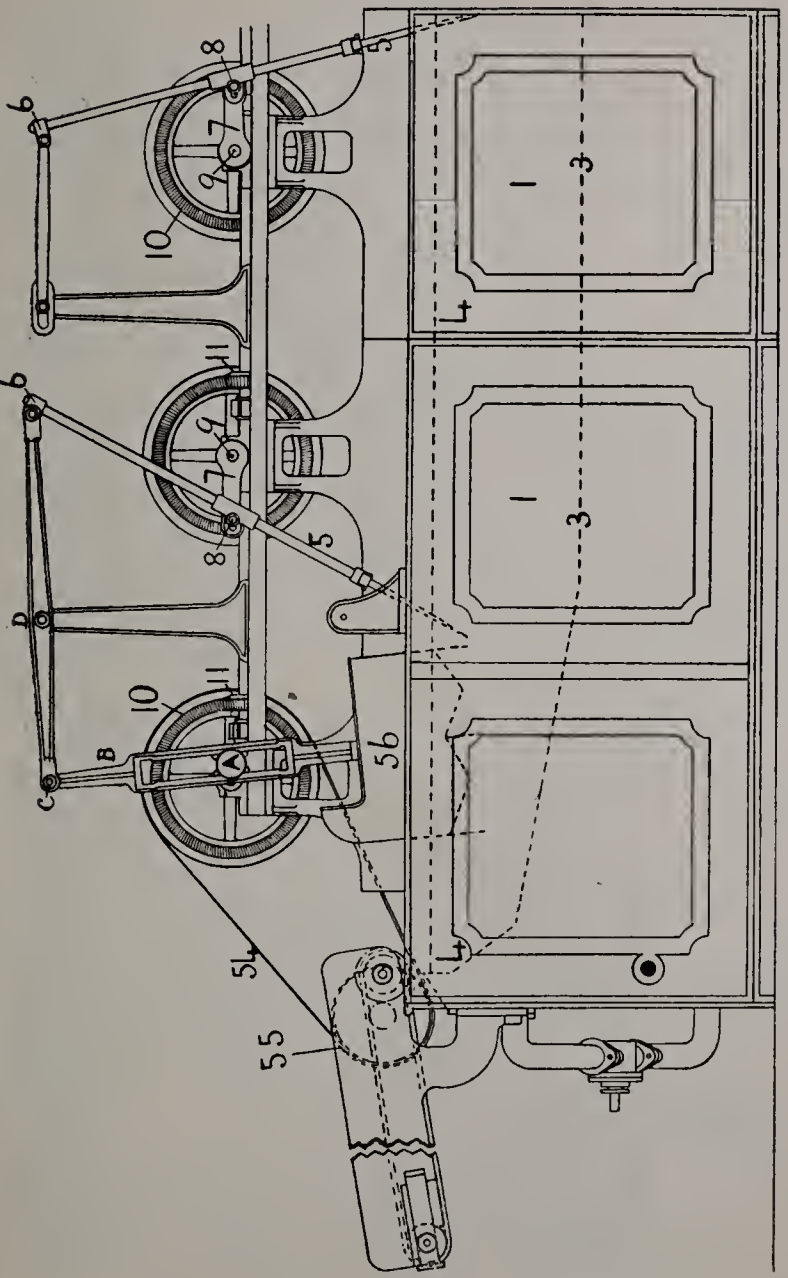

Fig. 25.

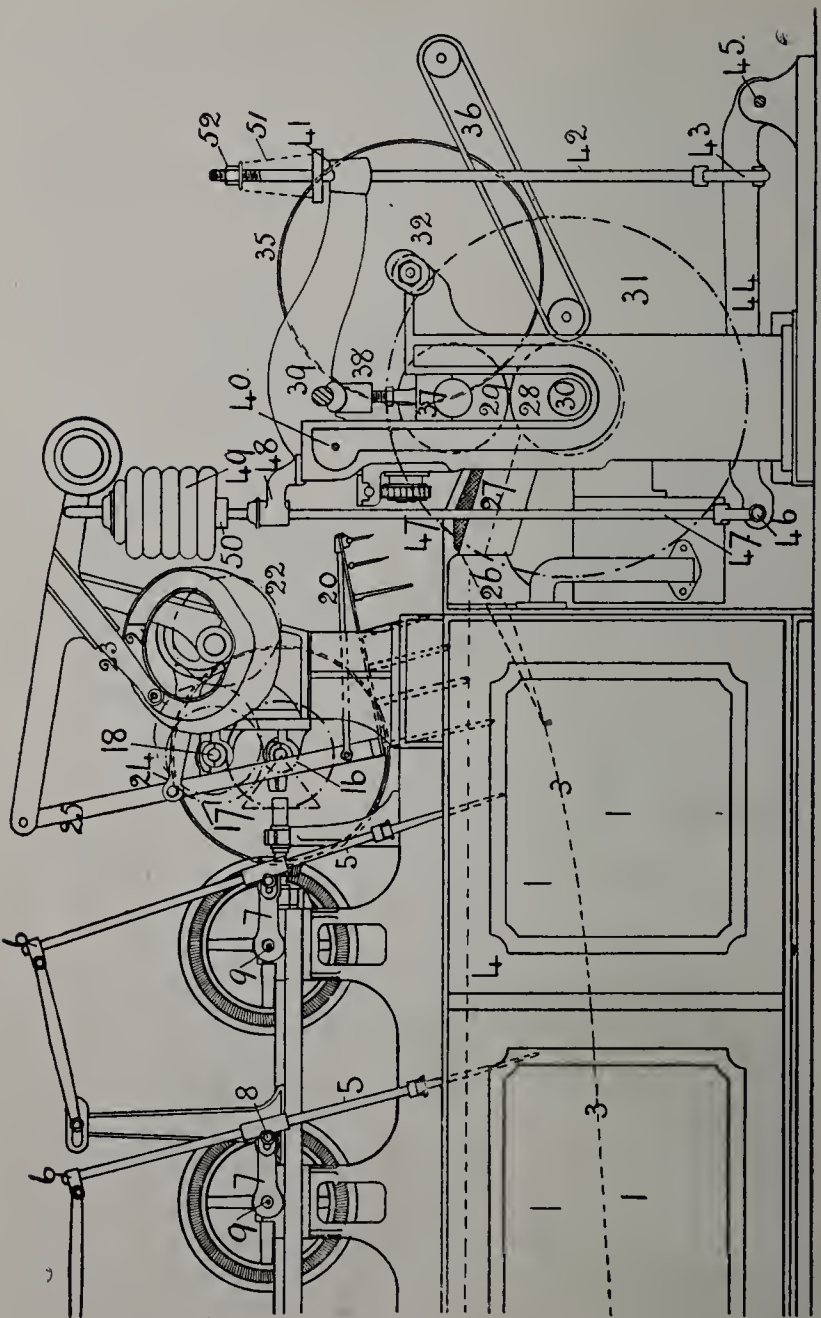

Fig. 26.

rollers by the compound lever arrangement illustrated from 37 to 51 inclusive. Number 37 is the bearing resting on the journal of top roller 29. An adjustable stud bolt 38 connects a similar bearing at its top on which the latter bearing the lever 39 rests. This lever has its fulcrum at the point 40 and power is applied to the free end of this lever at the point 41 on the connecting rod 42, which joins the lever 44 at the point 43 having its fulcrum at the point 45 ; the point of application of the force to this lever is shown at 46, where it joins the rod 47. This rod passes freely through the bracket 48 which serves as a guide and partial support to the rod. Six weights 49 are placed on the rod 47 near the top as shown ; a collar 50 fixed to the vertical rod serves as a support for the weights 49, the effect of which is to depress the rod 47, which though small, produces a considerable amount of pressure on the squeezing rollers 29, through the combined product of the levers 44 and 39. The spiral spring 51 placed on the rod 42 and resting on the free end of the lever 39, is kept under control by the adjustable nut 52 as shown. The chief function of this spring is to prevent any shock which might be caused if the top squeezing roller is lifted quickly in consequence of anything bulky passing the "nip," which also prevents the weights 49 from moving up and down to an extent they would otherwise do were no springs employed, and further the various parts of the apparatus are much relieved from sudden strain. A slight increase in pressure can be applied to the lever 39 and press roller 29 by tightening the nut 52 and compressing the spring 51.

To calculate the amount of pressure it is necessary to consider the following factors :—

(*a*). The length of the lever 44 from the centre of fulcrum 45 and centre of application of pressure at 46 ... ... } $44\frac{3}{4}''$

(*b*). The distance between the centre 43, the force of resistance in rod 42 and the fulcrum 45 ... ... } $10\frac{5}{8}''$

(*c*). The distance between the fulcrum centre 40, the centre 41 and the point of application of the pull in rod 42 on lever arm 39 } $27''$

(*d*). The distance between the centre 41 and the centre of pressure through the stud bolt 38 to the journal of the press roller } $5\frac{1}{2}''$

Then since the weights 49 are a variable quantity, let x lbs. = the weight of the combined weights 49. Then the combined pressure on the press roller 29 exclusive of spring 51 =

(1) Resistance in rod 42 to balance the pressure of the weights 49 = $\frac{x \quad 44\frac{3}{4}''}{10\frac{5}{8}''} = 4{\cdot}2\,x$ lbs.

(2) Total pressure on journals of roller 29

$$= \frac{4{\cdot}2x \times 27''}{5\frac{1}{2}''} = 20{\cdot}6x \text{ lbs.}$$

Expressed in one fraction the above equals

$$\frac{x\text{lbs.} \times 44\frac{3}{4} \times 27}{10\frac{5}{8} \times 5\frac{1}{2}} = 20{\cdot}6x \text{ lbs.}$$

i.e., a combined lever purchase of over 20 times the load applied at 49. Therefore if 200 lbs. be the load, the amount of pressure would be $200 \times 20{\cdot}6 = 4120$ lbs. A like amount of weight must be added on the opposite side of the machine, because all the parts from 28 to 51 inclusive are duplicated on that side of the pressing rollers.

Usually there are six weights in all, five of which weigh 32 lbs. each and one 14 lbs., so that the actual dead weight acting on the lever 44 and its duplicate is equal to $(32 \times 5) + 14 = 174$ lbs. plus the weight of the rod 47. The whole pressure of the weights 49 can be released immediately when necessary.

86. Action of Lattice Feed and Swing Rakes. The combined rotary motion of the lattice feed and the reciprocating action of the swing rakes is derived from the constant rotation of the cross shaft 9, Figs. 25 and 27.

The rotary movement of the lattice feed is conveyed from the shaft 9 and pulley 10 by a belt 54 and pulley 55 combined with the lattice feed 53.

The reciprocating action of the swing rake 5 is derived from the rotation of the crank arm 7 and its sleeve adjustment with the rake arm 5.

The wool is fed by hand or automatically on to the feed lattice 53. Immediately the wool enters the bowl, it is pressed down into the sud by means of the brass immerser 56 which prevents it from floating until it is effectually soaked in the liquid. A flow of water is constantly introduced at the feed end of the machine which tends to carry the wool forward. Immediately the immerser rises the first rake lightly pierces the wool and carries it forward to the next rake to be similarly treated to the end of the bowl. Whilst the wool is being carried forward in the scouring sud, a large quantity of dirt and sand falls by gravity through the perforations in the false bottom 3, and since the water below the perforated plate is partially at rest, the dirt accumulates at the base of the machine, so that when the outlet valves are opened, the accumulation of dirt runs off simultaneously with the dirty water. When the wool reaches the delivery end, the rake 20 passes it forward up the inclined plane 26. With each forward movement a quantity of wool is carried to the faller plate 27 and the material in its still open condition, enters the squeezing rollers 28 and 29. On emerging, this partly cleansed wool is received by the travelling apron 36 and conveyed into the second bowl where the process of the first bowl is repeated. At the delivery end of the last washing bowl the material is either seized by a fan, shaken and thrown

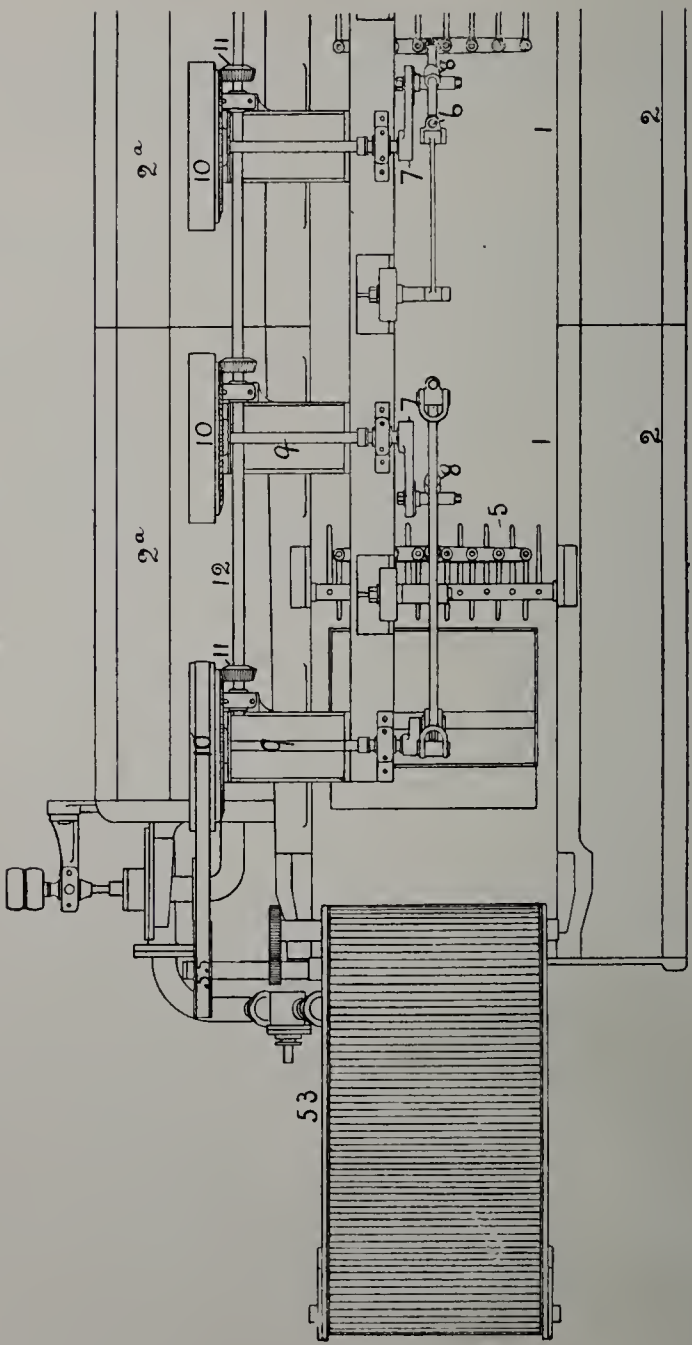

Fig. 27.

Plan view—Feed end—McNaught's Rake Machine.

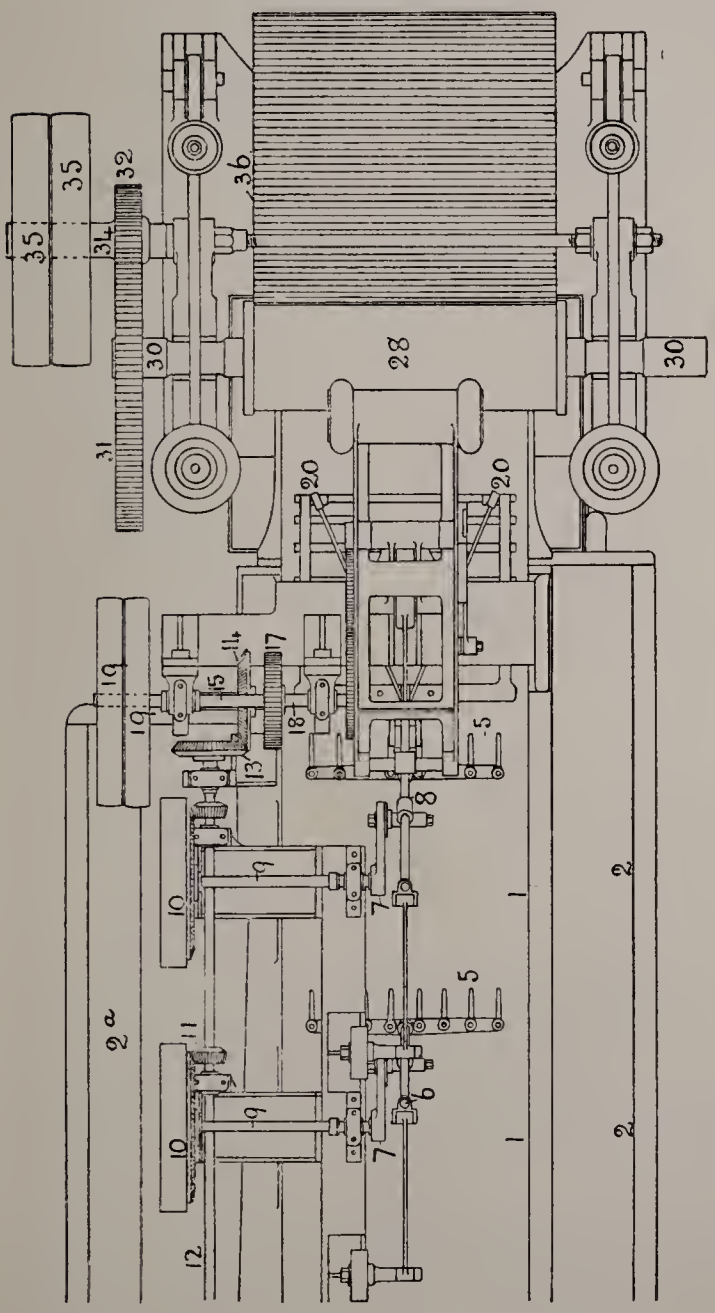

Fig. 28.

Plan view—Delivery end—McNaught's Rake Machine.

in a loose condition on to the floor, to be afterwards collected and taken to a drying table or other machine for the same purpose, or it is drawn by means of a fan through a tubular chamber into the feed end of a continuous drying chamber.

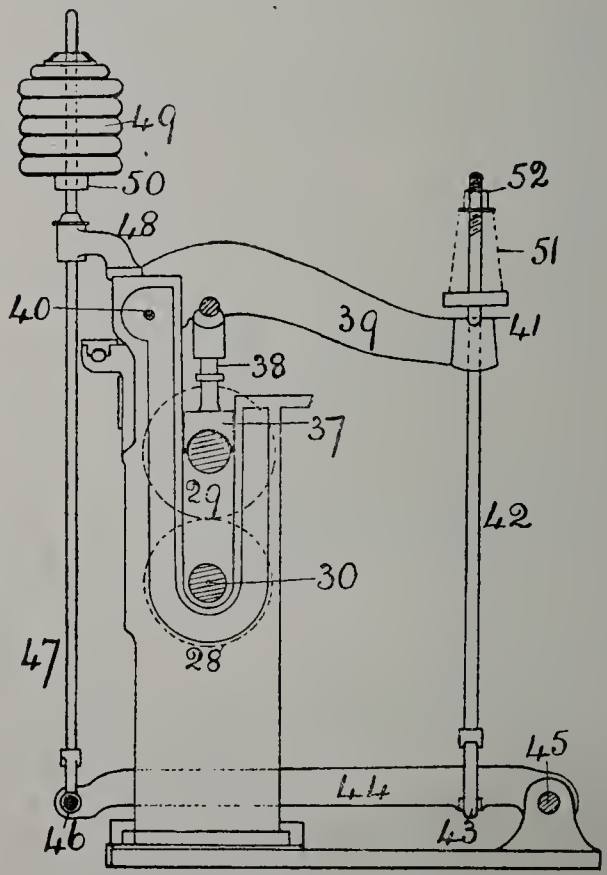

Squeezing Rollers in Wool Washing Machine, McNaught's Type with Weights and Compound Lever Compression.

Fig. 29

Experience has demonstrated that the dirtiest water from the wool is that squeezed out by the press rollers just as the wool leaves the various bowls, for which

reason this water is not allowed to enter the bowl, but is run into the side settling tank 2a, where being free from agitation, the dirt settles and the grease or insoluble lime soaps rise. The overflow from the side cleansing tank 2 also gravitates into the side settling tank 2a. It is from the centre of this tank that the sud which now contains many cleansing properties is injected into the wash bowl at the feed end, being previously heated to the required temperature which obviates the injection of live steam into the washing sud, a practice which acts injuriously on the wool at the point where the steam enters. The sud is returned from the 3rd bowl to the 2nd and from the 2nd to the 1st by means of a steam jet transmitter. See also Petrie's squeezing rollers (Fig. 33).

The foregoing swing rake type of machine is more suitable for the long coarse and dirty qualities of wool and for slipe or lime wool, because the agitation is more severe than the combined fork or Harrow type of machine.

Petrie's Wool Scouring Machines.

The original patent for the rake type of machine was granted to Mr. John Petrie, Jun., in 1853, since which date great strides have been made in the construction of wool washing machines.

Formerly, when English and coarse wools were chiefly used, much agitation was considered essential to cleanse the wool and consequently the rakes were run at a high speed, but with the increasing supply of fine Australian Merino wools which have a propensity to felt, it has been gradually recognised that when the wool is more gently treated better results are obtained, and this has resulted in the development of the "Harrow" type of machine for the finer wools and also a reduction in the speed of the rakes in the "Rake" machine. The reduced agitation given to wools, together with the increased quantities to be treated has involved an

increase in the length of the bowls and also the number of same. It is advisable to use the Rake machine for wools approximately up to 40's quality; from 40's to 56's quality the 1st machine rake and the second and third machines of the "Harrow" type. For all the finer numbers and qualities the "Harrow" type of machine ought only to be used.

87. Petrie's Rake Scouring Machine. The chief features of this machine are illustrated at Figs. 30, 31 and 32. The first and second are longitudinal sections in elevation of the feed and delivery ends respectively, and the third a transverse section through the tanks. The numbers in each diagram refer to corresponding parts. No. 1 indicates the position of the wash bowl where the scouring actually takes place. This "inner tank" permits a depth of liquor of about 12 inches above the perforated plates. The perforated plates at the base of tank 1 are indicated at 2, through which the sand, dirt, and other impurities fall into the compartment marked 3, where some of the solid matter descends on to a sloping bottom plate 5 to be subsequently washed out of the exit valve, the perforated plates 2 not necessarily requiring to be removed. A second compartment or tank is shown at 3—it is known as the "outer tank"—and has free communication with the inner tank 1. An adjustable overflow pipe is attached to the outer tank 3, so that the quantity of clean sud is automatically controlled to any required uniform height to suit the different wools. A third compartment marked 4 is known as the "side settling tank," which instead of being left on the floor, as is the case in some machines, is here raised to the same height as the scouring trough. The rakes 6 for propelling the wool through the sud are illustrated in their relative and respective positions as shown in the diagram; rake 7 is combined with the immerser 8 at the feed end, which consists of a box having a perforated brass bottom and

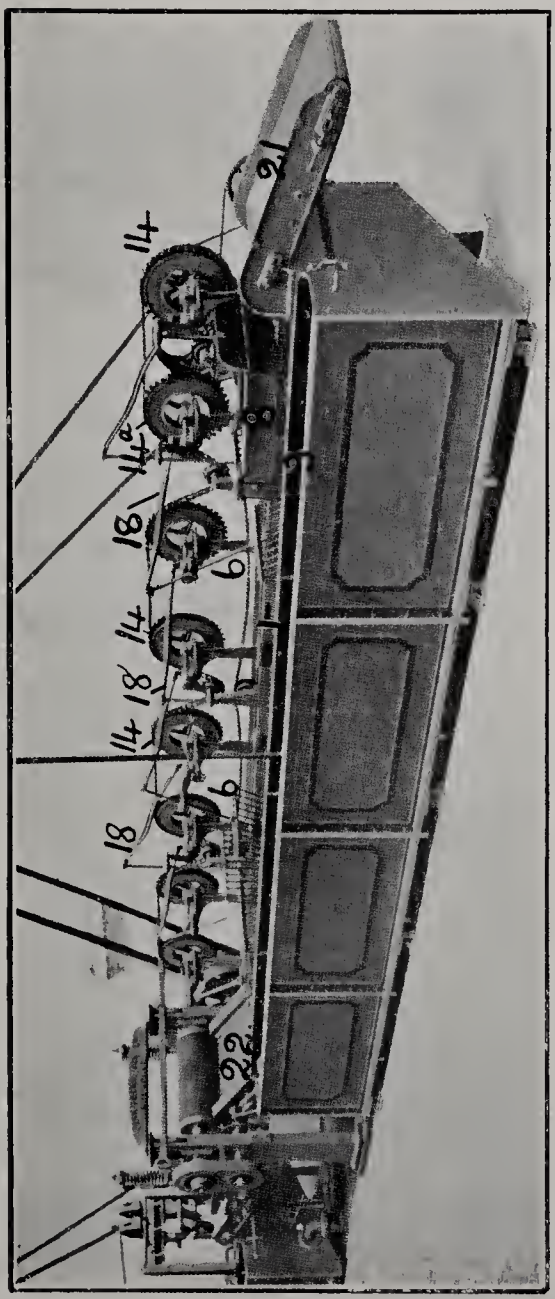

Plate III.

Petrie's Rake Scouring Machine.

spiked as shown. The fork 9 is combined with and forms part of the delivery rakes. The rakes are pivoted at 10 and rotary force is applied to the rake "stems" at points 11 by the respective crank levers 12, each of which is secured to corresponding stud shafts 13. To each stud shaft 13 a sprocket chain wheel 14 is secured, connecting each of which is an endless chain 16. This chain is kept at a uniform tension and in proper contact with the wheels 14, by the addition of the small adjustable wheels 17. The tops of the rake stems 6 are joined by the connecting rod 18 to the shorter levers 19, revolving on the same centre 13. The combined result of the forces acting at points 10 and 11 produces the requisite compound motion in the rakes which must travel slowly forward with the wool and rapidly backwards to the starting point. The chain wheel 14a is the chain driving wheel which in turn receives positive motion from the pulley shaft 20. The feed brattice is shown at 21; the slide lifter at 22 which is composed of toothed or spiked wood bars placed side by side and alternately moved forward and backward. If any wear of the roller covering occurs on only one end, then by adjusting nut 23, the lever arms 36 can always be kept horizontal; the squeezing rollers are shown at 24 and 25. The bottom roller 24 is fitted with flanges to keep the water from getting to the roller necks.

The parts which actuate the alternate spiked bars of the slide lifter are shown underneath the same. A shaft 27 supports and is free to oscillate a three armed lever marked 28, 29 and 30; the first is connected by a rod 31 to one set of alternate slide lifters, the second is directly connected to the second group of slide lifters, and the third is connected by a rod 32 to an eccentric 33, secured to the shaft 34 which is positively and continuously rotated, and in turn through the medium of the eccentric 33 reciprocates the rod 32, the effect of which is to alternate lever 30 and shaft 27, from which it will

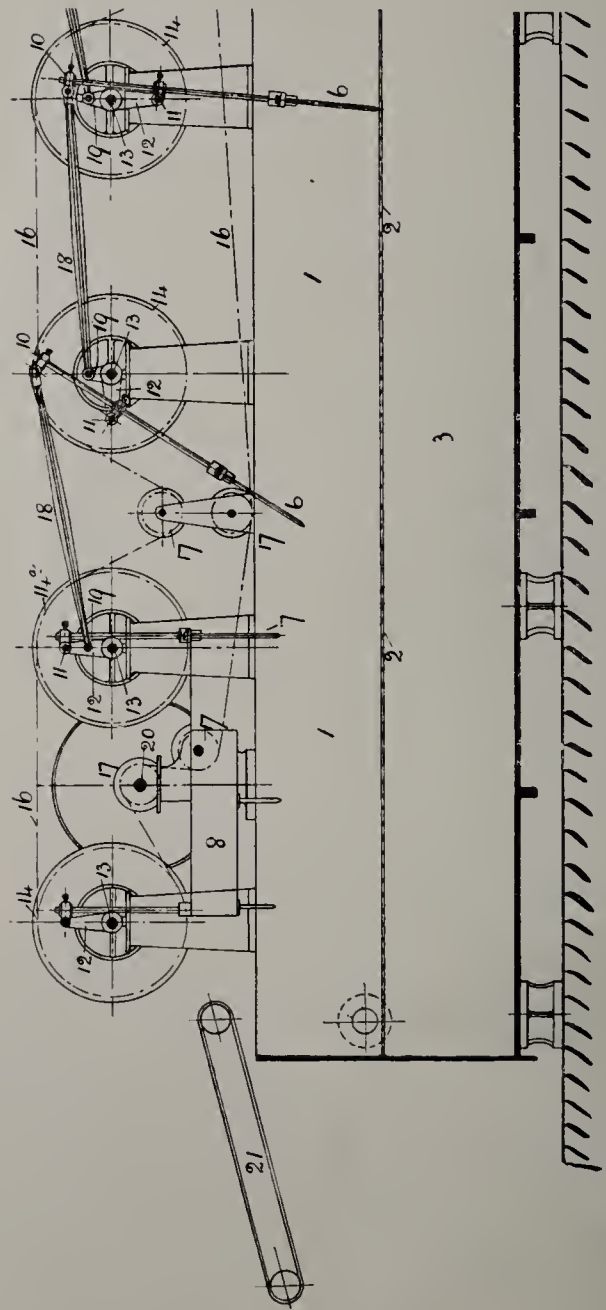

Fig. 30.

Longitudinal section—Feed end. Petrie's Rake Machine.

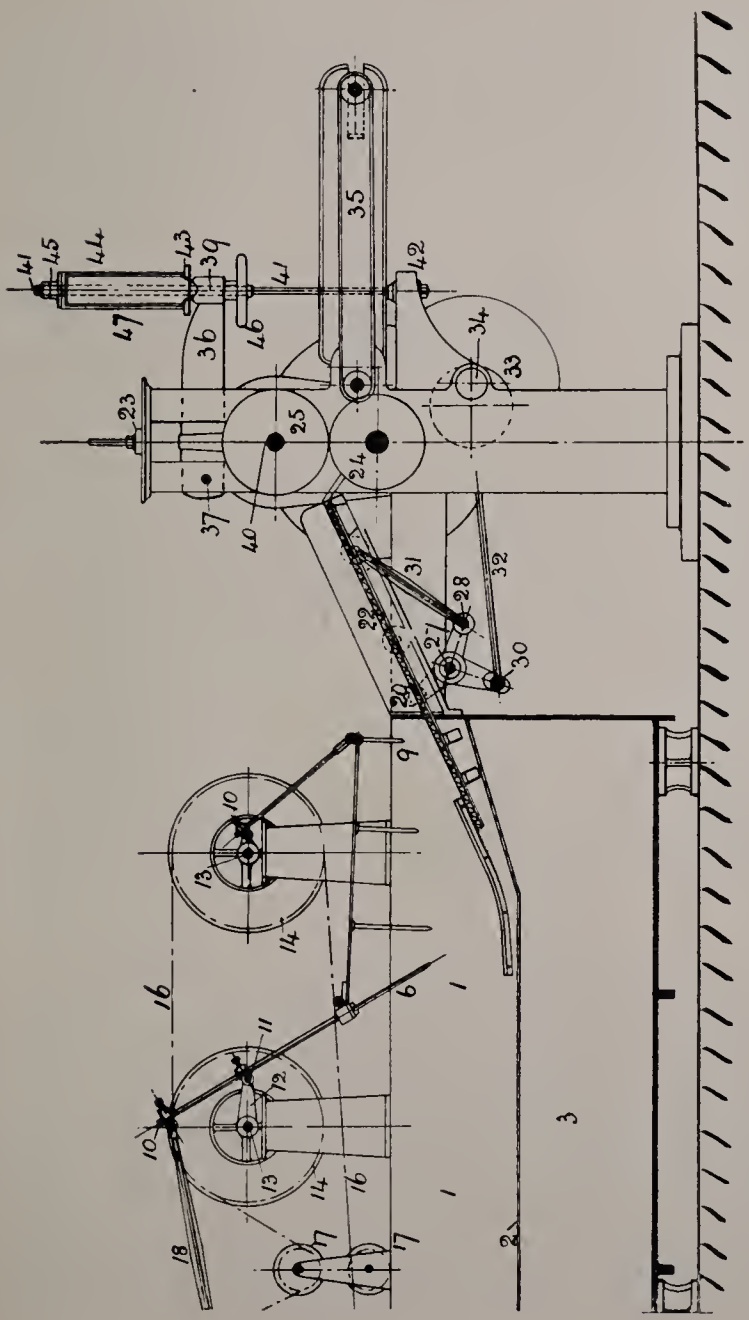

Fig. 31.
Longitudinal section—Delivery end. Petrie's Rake Machine.

be perceived, that as it oscillates the arms 28 and 29, and through their respective attachments, the group of slide lifters connected with lever arm 28 is moving forward while the alternate group of bars connected with arm 29 is receding and *vice versa*. The delivery brattice is shown at 35.

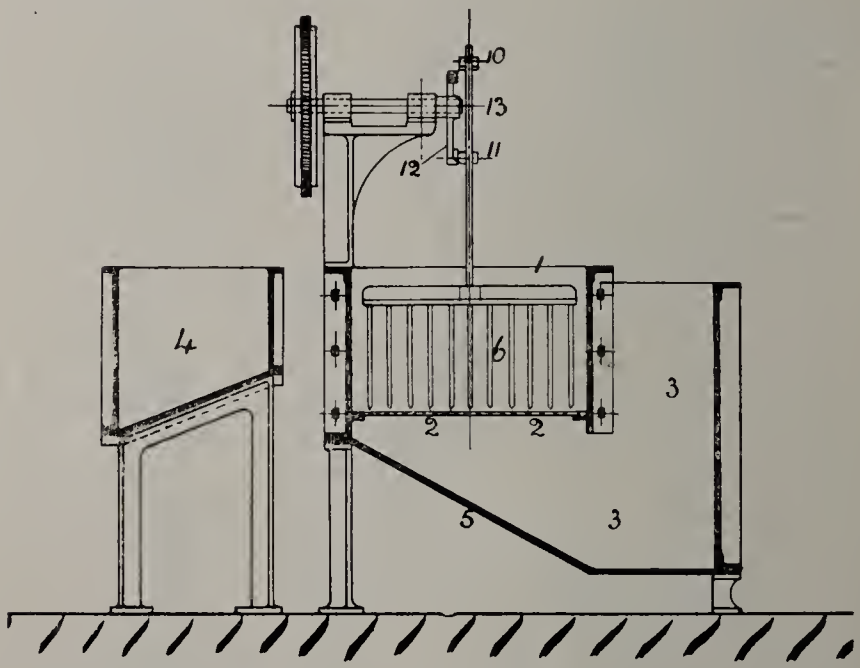

Fig. 32.
Transverse section. Petrie's Rake Machine.

Squeezing Rollers in Wool Washing Machines.

The mechanism which applies the requisite pressure to the squeezing rollers is illustrated from numbers 36 to 47 inclusive; duplicates of these parts are on the opposite side. The pressure lever is indicated at 36, its fulcrum at 37, the load centre at 39, and the resultant pressure on the squeezing rollers at 40. A vertical rod 41 stands secured to the frame support at the point 42. This rod

passes freely through the free end of the lever arm 36 at the point 39. A collar 43 resting upon the free end of the lever arm 36, supports a spiral spring 44, contained by a nut 45, at the top of rod 41. An adjustable hand-wheel is shown at 46, the chief function of which is to relieve the top roller pressure when the machine is not in motion.

88. Petrie's Type with Spring Compression.

The squeezing rollers (24 and 25) Fig. 31, are detached, illustrated in perspective at Fig. 33.

The requisite load pressure on the squeezing rollers, by this system is attained through the medium of spiral springs, in lieu of weights, as in Fig. 29.

Both systems are in common use and merit the favour of their respective clients. The advantages claimed for the spring compression method are :

1. Any increase in the thickness of the wool, in passage through the squeezing rollers, simultaneously and automatically increases the required pressure load on the top squeezing roller.

2. An increase in load pressure is gradually absorbed by the springs and is likewise progressively relaxed.

3. A uniform squeeze on the wool is produced irrespective of its thickness.

4. When pressure is applied through the medium of spiral springs, a " cushionery " effect is produced, as compared with the rigid alivity of dead weights.

The construction of the apparatus is very strong. The bottom roller is cast-iron or steel; the top roller is covered with wrapping of wool sliver or compressed cloth.

The maximum and average load pressure is 10 and 5 to 6 tons respectively.

The bottom roller receives its rotary motion from a compound system of spur gearing wheels. The top roller derives its rotation through frictional contact with the bottom roller.

The wool fed on to the feed brattice, upon entering the bowl is submerged by the immerser 8 and thoroughly soaked. It is then carried through the sud from rake to rake to the slide lifter, which effectually evens out the wool conveying it to the squeezing rollers in an approximately continuous sheet, which invention has added materially to the effective turn off of scoured wool. The water squeezed out of the wool by rollers 24 and 25, is not returned into the main tank immediately, but is first led into the side settling tank 4, and as there is no agitation of the liquor in this tank, the dirt settles to the bottom; the scum, and injurious and insoluble lime soap, rises to the top; the tank is somewhat raised, and the cleanest liquor is permitted to flow back into the main tank by gravity at will. The side settling tank is also provided with an outlet valve and an overflow pipe.

After the wool emerges from the squeezing rollers, it is received by the delivery brattice 35, and passed forward into the next machine. In the last machine of the series the brattice is sometimes replaced by a fan.

Steam jet transmitters are employed in lieu of pumps to transfer the liquor from the second, third or fourth bowl to the one immediately preceding it.

A view in perspective of this type of machine is shown at Plate III, and the numbers on the same refer to corresponding parts detailed in Figs. 30, 31 and 32.

Steel tube thermometers are attached to the machine with the steel tubes immersed in the hot sud. The indicator dial is controlled on the same principle as the gauge in a steam pressure boiler; hence the temperature of the scouring liquor is always registered and known, which is of vital importance to the wool washer.

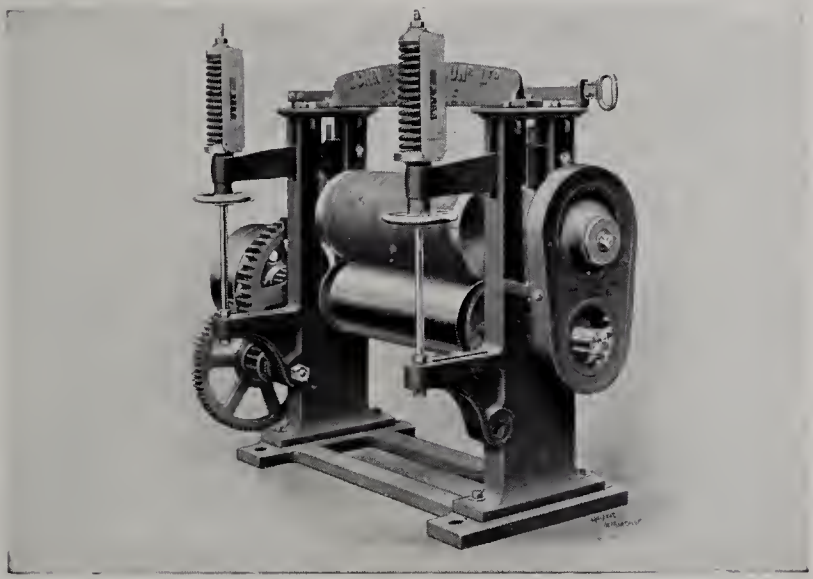

Fig. 33.

Squeezing Rollers in Wool Washing Machine.

Petrie's type with Spring Compression.

89. Petrie's 'Harrow' Type of Wool Scouring Machine.

A longitudinal sectional elevation is shown at Fig. 34 and a transverse section through the same at Fig. 35. The tanks of this machine are like those of the Rake type shown at Figs. 30, 31 and 32, numbers 1, 2, 3 and 4 refer to corresponding parts. The feed and delivery ends together with the squeezing rollers and the principle of applying pressure to them are all of similar construction and therefore require no further description, in fact these parts of the machine are so designed that it is comparatively easy to convert one machine from one type to the other. Wherever parts are referred to by numbers they correspond with parts in the Rake machine. The chief points of difference are designated by letters.

A represents the forks or prongs which are carried by the rod tubing B and the cross tubing C, all parts of which are combined and move together. This framework of prongs is connected by the rods D to the lifting lever E, fulcrumed at F and balanced at G. The levers EE are connected as shown and the whole is secured to the supports H resting on the top plates I of the washing bowl; the lever E (at the feed end of the machine) is connected by the rod J at the point K to a simple lever L in the point M. A cam N rotating on the shaft O is positively driven from the pulley shaft; this tappet is kept in travelling contact with the free end of lever L and through the connection described, is free to vertically reciprocate the "Harrow" frame and prongs. A connecting rod P links the tube B with a small slot lever Q at the points shown. The slot lever Q is oscillated horizontally by a crank lever R also rotating with the shaft O. The slotted lever Q is pivoted at S.

The only other points of difference are T, which shows the sloping shape of the bowl at the delivery end and the faller plate U which guides the wool into the nip of the squeezing rollers. Underneath the bottom roller

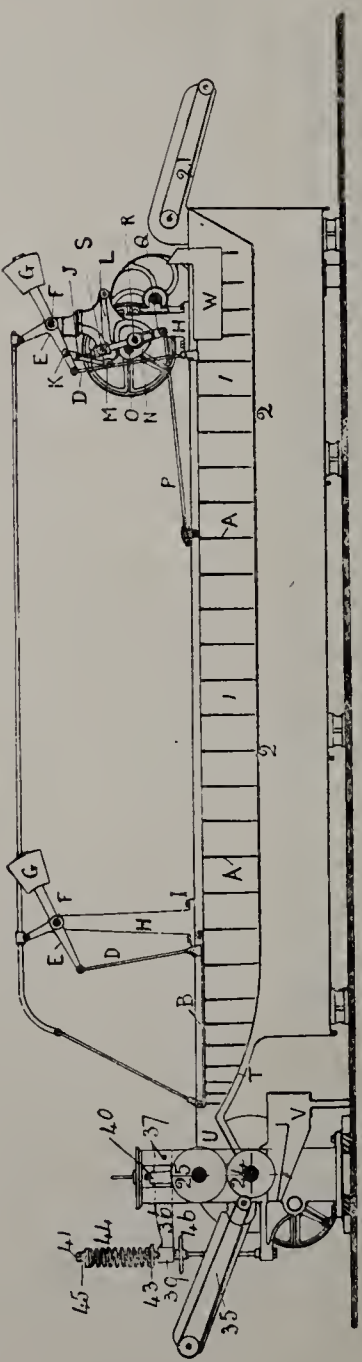

Fig. 34.

Longitudinal section through Petrie's "Harrow" Wool Washing Machine.

24 is placed a "sud dish" V which collects the liquor squeezed from the wood. This dish is fitted with a perforated brass plate. Any wool falling at the rollers is retained in the dish and easily removed without being stained. The liquid percolating through the perforations in the dish runs into a centrifugal pump which raises it into the side settling tank 4, placed at the gearing side of the machine.

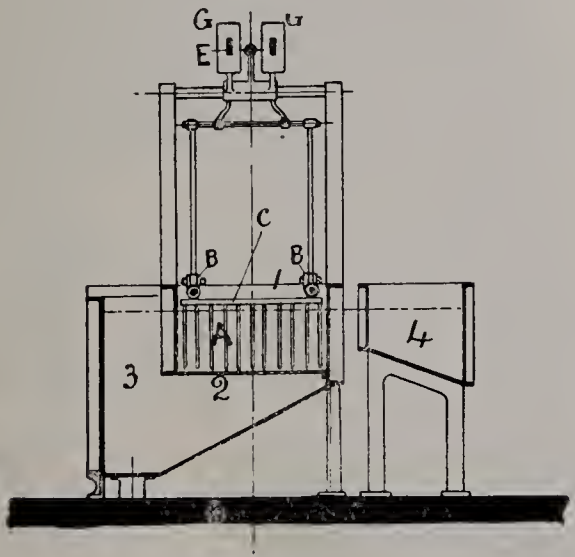

Fig. 35.
Transverse section through Petrie's "Harrow" Machine.

The construction of the tappet N is designed to elevate or depress the Harrow in, as near as possible, a perfectly vertical line, when descending into or rising out of the liquor, and the adjustment of the lever R through the connections explained, makes the forks travel slowly forward when in the sud, as nearly as possible parallel with the bottom plates, the length of its stroke, and after being lifted vertically out of the sud, rapidly return to repeat the operation.

At the feed end of the bowl, the " Harrow " carries the immerser box W, having a perforated brass bottom. When the forks move downwards into the sud, the immerser submerges the wool entering the bowl and at the same time becomes filled with liquor which rises up through the perforated bottom. As the forks rise, this liquor falls upon the wool beneath, and helps still further to effectually immerse the wool. The forks simultaneously gently depend into the liquor and propel the wool towards the delivery end of the machine. This end of the " Harrow " is hinged to its main supporting mechanism, but the motion of the delivery end is separately controlled and its action so arranged that the forks follow the shape of the rising plate T, and the wool is carried in a continuous sheet to the press rollers and delivered to the next machine, or direct to the wool drying chamber.

90. Petrie's and McNaught's Automatically Self-Cleaning Wool-Washing Machine. For nearly a century Petrie's and McNaught's have been the two outstanding manufacturers of wool washing machines.

In the year 1920 their interests were combined. Partly as a result of this combination a new and self-cleaning wool washing machine has been introduced to the trade.

This new machine retains all the chief features characteristic of each maker.

The fork motion, whether of the Swing Rake or Harrow type, is not superseded or changed. The design of the wash bowl is considerably improved and the side settling tank neutralised.

No appreciable advantage is claimed where small lots are washed or for neutralising the acid after the process of carbonising.

A perspective view of a single bowl of the above type of machine is illustrated at Plate IV.

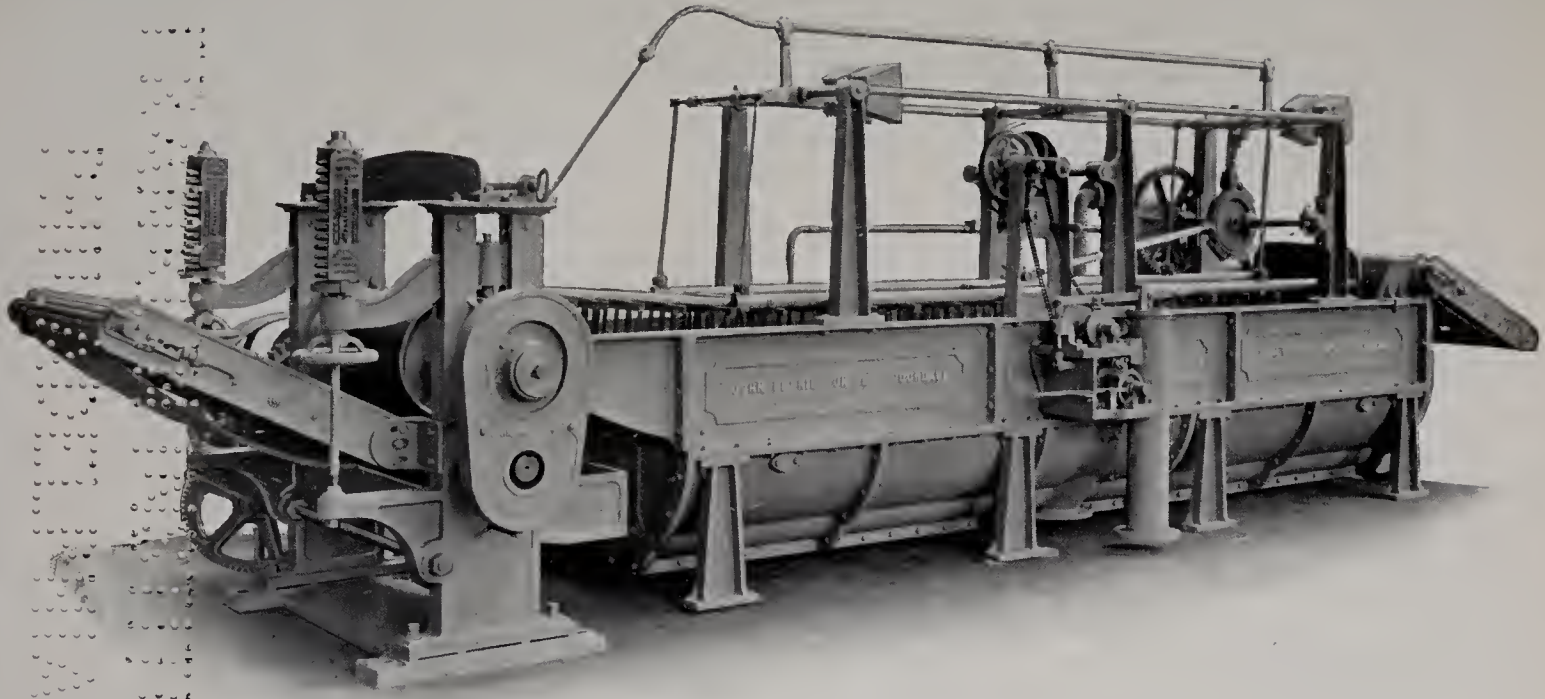

Plate IV.
Petrie and McNaught's Automatic Self-Cleaning Wool Washing Machine.

The normal set of bowls is five; occasionally six are used.

The object of the above design is to automatically and continuously remove, from the wash bowl, the accumulating dirt, sand and grease, combined with a small quantity of spent liquor and simultaneously admit a fresh supply of scouring solution to replace the portion discharged. These operations are completed during the actual period of scouring and without any stoppage of the machine.

A second advantage claimed for this process is, that since the scouring liquor is naturally maintained at a point which is neither too fresh nor yet fully deteriorated, its mean effectiveness is therefore constant. Any attainment of this object is obviously an advantage.

The mechanisms which propel the wool through the sud and squeeze the dirty liquor out of the washed wool are of the usual pattern heretofore described.

The tank is as usual divided into an upper division in which the wool is scoured and a lower division, below the perforated plates, where the sand, dirt and foreign matter settle.

A hopper is specially constructed in the centre of the base of the tank into which the sand, dirt, etc., are directed through the rotary influence of a spiral conveyor provided with right and left hand "direction" blades.

The hopper is constructed with an outlet valve through which the foreign matter is discharged.

The opening and closing of the hopper valve is automatically controlled by a simple timing mechanism, which is adjustable and set to suit the requirements of the different classes and conditions of wool to be scoured.

The quantity of dirty sud removed is exactly replaced by clean liquor from a side reservoir tank. The mechanism designed to accomplish this object includes a centrifugal pump, a sluice valve and a ball tap.

Alkaline Scouring and Volatile Solvents—Comparisons.

91. Alkaline Scouring. In the foregoing machines the latest developments for cleansing wool have been described. The efforts of the various makers and inventors to minimise the objections which are inseparably associated with the process of alkaline scouring are praiseworthy. Our task however does not consist of advancing the claims of either this or that arrangement, but rather of considering the question as to whether the principles upon which they are based are sound and in harmony with the subsequent treatment which the wool has to undergo during its conversion into a thread. The method of continuous spinning by means of two pairs of rollers is probably firmly established for all time and we ought therefore to perform all the earlier operations so as to fulfil all the conditions which this mode of spinning requires. To even the most casual observer who has any knowledge of the structure of the wool fibre and is acquainted with the requirements of worsted spinning it will be apparent that however carefully regulated the temperature and alkalinity of the sud may be scouring by saponification has many features which are undesirable. The necessary concomitants of this method when acting in conjunction are fruitful sources of mischief to the wool. By softening the cells and rendering them turgid the penetration of the alkalies into every part of the fibre is favoured and even though the wool may pass through an additional bowl, it cannot entirely remove them. Repeated washings do not completely free the fibre from them, and it must be remembered that after the wool has left the scouring machines a large excess of moisture has to be driven off by the drying machines, which only concentrate the alkalies within the cells and thus cause them to be more detrimental to the organic unity of the fibre.

The practice of useing the suds over and over again, although necessary from an economical point of view, is very undesirable. It reduces the quantity of water which is consumed, and may in some cases also cause less detergents to be required. Still it is far from being an ideal system of scouring. The strength of the scour could not then readily be estimated, but the scouring agents would be added without any reliable evidence as to the quantity required, which simply meant that some parts of the blend of wool would receive much more energetic treatment than others. This method is one of uncertainty. If the solution is not of sufficient strength, the wool is only indifferently scoured, while, on the other hand, if too strong the stability of the fibre is endangered. From what has been said it will be seen that this system of scouring has many objectionable features, but nevertheless it is the only one which has been developed with any degree of success. It presents a ready and, comparatively speaking, simple mode of cleansing, but still it is very far from being what one could call an ideal system in these days of scientific enlightenment and progress.

A much better system would be to use only those substances which, when present in excess, exercise no injurious influence on the wool.

92. Volatile Solvents. There is, evidently, much room for devising a method which will enable the wool to be successfully and expeditiously treated with one or other of the volatile solvents.

This is undoubtedly the most rational and safest way of cleansing wool. The substances employed exert no injurious action on the fibre, and, further than that, they may be used over and over again, while the impurities can be recovered and used for the manufacture of various substances extensively used in commerce.

It is true that many attempts have been made in this direction without any material success; but in the

interest of progress it is desirable that research on these lines should be continued.

If any doubt should exist as to the relative merits of the two systems, let two samples of wool be taken and one treated with carbon bisulphide and afterwards rinsed in tepid water, while the other is washed by the alkaline method and, after drying compare the results.

The application of this system has so far resulted in a profuse array of pipes and valves which almost exhaust our descriptive powers; but this does not alter the suitability of the substances—it merely shows us that to be successful simplicity of arrangement must be aimed at and not diversity of parts. The more complicated the mechanism is, the greater is the liability to failure. That the difficulties are not insuperable is shown by the progress which has already been made in this direction. Wool cleaned by this system spins to finer counts, and does not require the same amount of attendance, owing to the delicate serratures having been preserved uninjured. In addition to this, much less waste is made during manufacturing, the yarn has a better colour, dyes more evenly, and is full, soft, and elastic—just what a typical yarn ought to be.

93. Comparisons. Compare the two systems: Alkaline scouring compels the use of a heated sud containing detergents, such as soda or potash, which act injuriously on the surface structure of the fibre, and even when the greatest care is exercised the wool suffers from the treatment, and often loses its softness. The mineral salts and organic impurities are lost to the manufacturer because of the large volume of water which has to be used. The cleansing agents are of a solid crystalline character, and consequently when they are concentrated in the interior of the fibre by drying, the molecules are deposited in the interstices of the cell wall, causing them to assume a yellow tint and become dry and tender.

On the other hand, when scouring with volatile solvents the use of heat can to a large extent be dispensed with. The substances used exert no injurious influence on the wool, and may be present in great excess without in any way deteriorating its value. Being liquid and volatile, nothing of a detrimental nature can be deposited in the fibre. They can be recovered by distillation and used time after time with but little decrease in their quantity. All the impurities, too, that have been removed from the wool can be reclaimed and made to furnish an additional source of profit. Another important feature is the soft and natural condition of the wool cleaned by this method, which will be found to be " kind," elastic, and to retain all its natural peculiarities, whereas by the ordinary method it acquires a tenderness which may be easily detected.

There is, however, much risk connected with the use of naptha, and petroleum spirits as detergents, because they not only remove the grease and dirt from the surface but penetrate to the interior of the fibre and remove every particle of wool fat which, if permitted will result in loss of strength and elasticity and a deterioration of its natural properties. The inflammable character of the materials employed is also a source of danger. It is, however, to be hoped that ere long a simple plan will be introduced whereby these volatile solvents may be successfully utilised for this purpose.

It might further be noted that much of the foreign matter which is removed from the wool by the usual washing process, contains many valuable substances such as potassium carbonate, etc., which though recoverable without excessive difficulty, are nevertheless lost—no attempt being made to regain the soluble salts.

It is, however, true that the greasy constituents are often reclaimed. The waste scour is run into lined tanks, after which sulphuric acid is added. This liberates the

grease from its combinations, and causes it to float on the surface. It is then collected and placed in bags, which are taken and put into a steam screw-press provided with a tap at the bottom. Then heat and pressure quickly liquefy the fatty matter, which runs out at the tap and is collected in casks to be disposed of to the refiner or utilised for oiling low woollen materials as they pass through the fearnought. The residue is usually used as manure, being exceedingly rich in fertilising substances.

CHAPTER XI.

WOOL DRYING.

94. *The science of Wool Drying.* 95. *Drying Tests—Research Results.* 96. *The Hydro Extractor.* 97. *The Table Dryer.* 98. *Petrie's and McNaught's.* 99. *Textile Conveyor.* 100. *Principle and Processing Characteristics.*

94. The Science of Wool Drying. After the wool has been cleansed from its natural impurities such as natural grease or yolk, dried perspiration or suint, sand and dirt, it is necessary to remove the excess of moisture by subjecting the washed wool to a natural or artificial process. Simple as this may appear, all experience demonstrates that much science is required to perform the operation successfully. In preparing these notes, the writer has been amazed at the vast number of machines designed for the above purpose.

The important and chief factors required in a modern wool drying machine are :—(1) evenness of drying, (2) turn off of material, (3) condition of same, (4) economy of heat, (5) space occupied by machine, (6) power required for driving, (7) attention and number of employees necessary and (8) total cost.

The success or failure of each machine depends very much upon the presence or absence of the foregoing and most modern improvements are designed to satisfy the above conditions.

It has long been held both by practical men and theorists that the more evenly and naturally the wool is dried, the better it will be for the preparation of the fibres in the subsequent processes. The most ideal condition would therefore be to expose it in the open air

and dry it in the sun with a moderate breeze, but the weather is too fickle and the process too slow.

It would then appear that a moderate heat with a current of air passed through the wool by means of a fan would be the nearest approach to natural conditions. But modern economy demands a large turn-over in minimum time and space which cannot, however, be accomplished without excessive heat. Many persons assert that the temperature at which wool should be dried ought never to exceed 100° F. otherwise the fibres lose their suppleness, become brittle and deteriorate in colour. Probably these results are more largely due to leaving the material in the high temperature after all the moisture has been driven off. It may therefore be necessary for economical and commercial reasons to dry quickly, wool, cotton or flax at a high temperature and *so long as the material is giving off moisture during the period it is kept in or is passing through any drying machine* and providing it is possible to immediately clear the machine of the wool, etc., passing through it, in case of breakdown, *no damage to the structure of the material will result.*

The problem, therefore, to be solved, is how much moisture in excess of the normal standard condition is it safe to extract by artificial drying? Two thoughts occur at this juncture—(1) if the wool is not sufficiently dried, mildew may subsequently take place, (2) if absolute dryness is obtained, the wool fibre will lose some of its hygroscopic affinity. It should be observed that a certain quantity of moisture must be left in the wool to admit of it being worked later. It is difficult to state with certainty the amount of moisture which should remain in the wool when taken from any drying machine, but experiment and observation hitherto suggest approximately 3% to 4% below standard condition, and this amount will serve as a starting point for further research on the subject. The fact that wool

will readily absorb moisture from the air immediately it is taken from the drying chamber and as it cools, must however, be kept in mind.

When the wool is dried too much, moisture must be subsequently added to facilitate its working, but it can never be so intimately distributed throughout the fibre as it was before the drying process.

A fixed thermometer should always be attached to each washing bowl and drying machine. The bulb must be contained within the air chamber of the drying machine and in the washing liquor of the washing bowls, but the indicator should be visible on the outside of the machines, so that the various temperatures can be noted and recorded, to be afterwards compared with the behaviour of the wool in the subsequent operations.

95. Drying Tests—Research Results. Apropos this point and for educational purposes the following experiments were conducted, with the results as tabulated on page 155.

The primary object of the research was to ascertain what difference of effect the drying of textile yarns at varying temperatures and corresponding reductions in time would have on the average breaking load of the subsequently dried yarns. In each case the samples, after being dried by the prescribed method, were allowed to lie in a yarn store of normal temperature for one or two days before they were subjected to the strength test.

In some respects the following results are remarkable. The difference in the load tests was not considerable, varying from 5 to 12%, but the surprising factors were that the yarns which were subjected to a low temperature for long periods did not resist as great a load test as the yarns which were dried at a high temperature for a short period.

It is not, however, presumed that these tabulated results are conclusive in favour of rapid drying involving

comparatively high temperatures, so long as the material is not subjected to continued drying beyond the normal and natural hygroscopicity of the fibres, but it should give food for thought and cause one to pause before making any rash assertion in favour of either theory.

Over-drying results in the dessication of the fibre, and probably an alteration both in its mechanical and chemical composition, because when the amount of moisture is decreased below its normal percentage a rearrangement of the atomic constituents of the cells must take place. The result of this is that the chemical constituents will in some cases be resolved into simpler compounds and the stability of the fibre impaired.

When too dry the fibres become electrified, and are then mutually repellent, flying away from each other, and clinging tenaciously to the metallic parts of the machinery. Some idea of their behaviour when in this condition may be formed from a simple experiment. Take some rough brown paper and make it hot before the fire, then place it on the knee and rub it briskly one way with the coat sleeve. If now it be held a short distance from some dry wool fibres, they will be attracted to it precisely in the same manner that a magnet attracts a piece of steel. When electrified they resist the action of the machines, and fly away from the thread in every direction.

Various arrangements have been devised for ensuring the rapid drying of the wool by means of heated air. These may be grouped under two heads, according to the manner in which they treat the wool—viz., whether it remains stationary or is kept continually moving. Of the former type, the table dryer may be taken as a representative, while the latter includes Petrie and McNaught's, Fieldings', Hunter's, U.S.A., Moore's The Textile Conveyor Co., Ltd., Bradford, and other continuous dryers. The hydro extractor, which is sometimes employed as a preliminary to final drying, will be first briefly described.

No. of test.	Quality of sample tested.	Method of drying.	Actual time occupied in drying.	Maximum temperature to which the material was subjected.	Wet Weight in grains.	Dry Weight in grains.	Percentage of direct loss.	Average breaking load on a stretch of 26" of single yarn after drying. 12 tests).
1	2/36s worsted	Dried on copper cylinder	30 mins.	182°F	269 grs.	119 grs.	55·8%	11 ozs.
2	2/36s worsted	Dried in iron drying chest	5 hrs.	80°F	269 grs.	126 grs.	53·2%	10·5 ozs.
3	2/36s worsted	Dried in current of atmospheric air	5 hrs.	60°F	269 grs.	135 grs.	49·6%	9·8 ozs.
4	2/36s worsted	Dried in conditioning oven	1 hr.	100°F	269 grs.	123 grs.	54·3%	10·4 ozs.
5	60s line flax	Dried on copper cylinder	15 mins.	178°F	226 grs.	200 grs.	11·5%	18¾ ozs.
6	60s line flax	Dried in iron drying chest	5 hrs.	80°F	221 grs.	212 grs.	4·1%	17 ozs.
7	60s line flax	Dried in current of atmospheric air	5 hrs.	60°F	225 grs.	213 grs.	5·3%	13¾ ozs.
8	60s line flax	Dried in conditioning oven	15 mins.	200°F	231 grs.	207 grs.	14%	14 ozs.

96. The Hydro Extractor. Though chiefly used for drying yarns and cloth it is sometimes employed as a preliminary process for drying wool, and some think it ought to be more extensively employed for this purpose as, by this method as much as 70% of moisture may be removed without the application of heat, and although this is not a sufficient quantity, yet the wool is left in an open and lofty condition. It might, therefore, be advisable to carefully consider and see if it would not be more advantageous to prepare the wool for the hot air dryer by a preliminary whizzing in the hydro ex-

tractor. This machine consists of a circular and perforated brass cage enclosed in an iron shell. The necessary driving power is applied (1) by a belt or rope which passes from the main or counter shaft to a pulley placed on a vertical shaft which supports and rotates the perforated cage, or (2) by an independent motor attached to the side of the machine. The cage revolves at a very high speed—between 1500 and 2000 revolutions per minute—and the water is driven out by the centrifugal force thus generated. The capacity or amount of force is dependent upon the speed of the cage. The principle of its action is well illustrated by a simple and familiar experiment. If a quantity of wet wool be tied to the end of a string about a yard in length and swung rapidly around, the water is expelled by the centrifugal force generated, and this is exactly what happens in the hydro extractor.

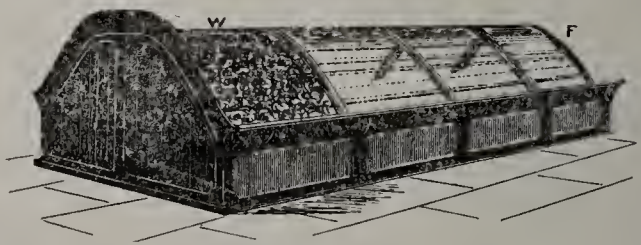

Fig. 36.

97. The Table Dryer. This machine is simple and one of the first methods adopted for mechanically drying the wool and is still used. A line diagram in perspective is submitted at Fig. 36. The chief features of this arrangement are a low table with a flat top and sloping sides, though in some of the more modern types the transverse section of the table is circular.

The surface consists of galvanised wire netting on which the loose wool is spread, as shown at W. It must be spread lightly and evenly, so as to ensure it being properly dried. Beneath the netting, rows of steampipes

are placed, and one or two powerful fans fixed in the end of the machines at F force the hot air through the wool.

A second table is sometimes joined up to the first on the remote side of F. The dimensions of each table vary from 18 to 30 feet in length and 9 to 10 in breadth. In some instances the steampipes are placed over the netting; in that case the heated air must be drawn downwards through the wool, but this has a tendency to compress it, causing it to be dead and heavy. When an upward current is used it tends to lighten the layer of wool and dries it much better.

The drawback to the foregoing arrangement is that the wool requires turning over at intervals to prevent scorching and ensure even drying, and unless it be spread evenly on the table, irregular drying will be the result. These objections have led to the continuous systems of drying, where the wool is constantly moving and being turned over automatically during the operation.

98. Petrie and McNaught Drying Machine. The wool drying machine as made by this firm is extensively used. It is usually adjusted so as to receive the washed wool direct from the squeezing rollers of the finishing wash bowl, exclusive of any intermittent labour or transport.

Plate V. illustrates in perspective a view of this machine from the delivery end.

Fig. 37 is a line diagram in longitudinal elevation of the same machine. The essential apparatus is enclosed in a large iron chamber of rectangular appearance. The capacity of the machine may be varied to suit individual requirements, a convenient size being about 28ft. long, 7ft. 6in. wide, and 11ft. high. At the base a powerful fan is placed, which forces a strong current of air through a tubular heater—composed of a coil of steam-pipes—to every part of the machine. The use of the

heater is, however, optional, and may be dispensed with if it is thought desirable, and a cold current of air substituted. This enables the temperature at which the wool is dried to be carefully regulated. A series of trays—3 or 5 in number—is fixed one over the other in the interior of the chamber, about 18in. of space intervening between them. They consist of bars arranged parallel to each other, every alternate bar being so arranged by means of lever and rod connections that it has a forward and backward movement, together with an ascending and descending motion. The principal parts of the machine referred to are as follows: A is the travelling feed brattice, B the feed rollers, C the air duct or channel up which the wool is blown immediately it is released from the nip of the feed rollers B. The respective movable trays are indicated at D, D^1, D^2, for a three tray machine. The requisite mechanism which produces the reciprocating movement in the trays is illustrated by the parts lettered E to M inclusive. E is the driving pulley secured to the machine shaft F. This shaft runs through and across the top of the delivery end of the machine, see also Fig., Plate V. A spur pinion G on the remote side of the machine gears into and drives an intermediate stud wheel H which in turn rotates a spur wheel I secured to the shaft J. Compounded with the wheel I is a stud K which an adjustable connecting rod L links to the travelling frame D at the point M. This point represents a fixed stud in the tray D and a sleeve compounded with the end of the rod L, so that the sleeve is free to move the stud and simultaneously oscillate about it. Parts H to M inclusive are twice or four times duplicated (according as the machine contains 3 or 5 movable trays) as shown at H^1, H^2 to M^1, M^2 inclusive. The constant rotation of wheel I with stud K through the mechanism described above produces the requisite backward and forward horizontal motion in the tray D.

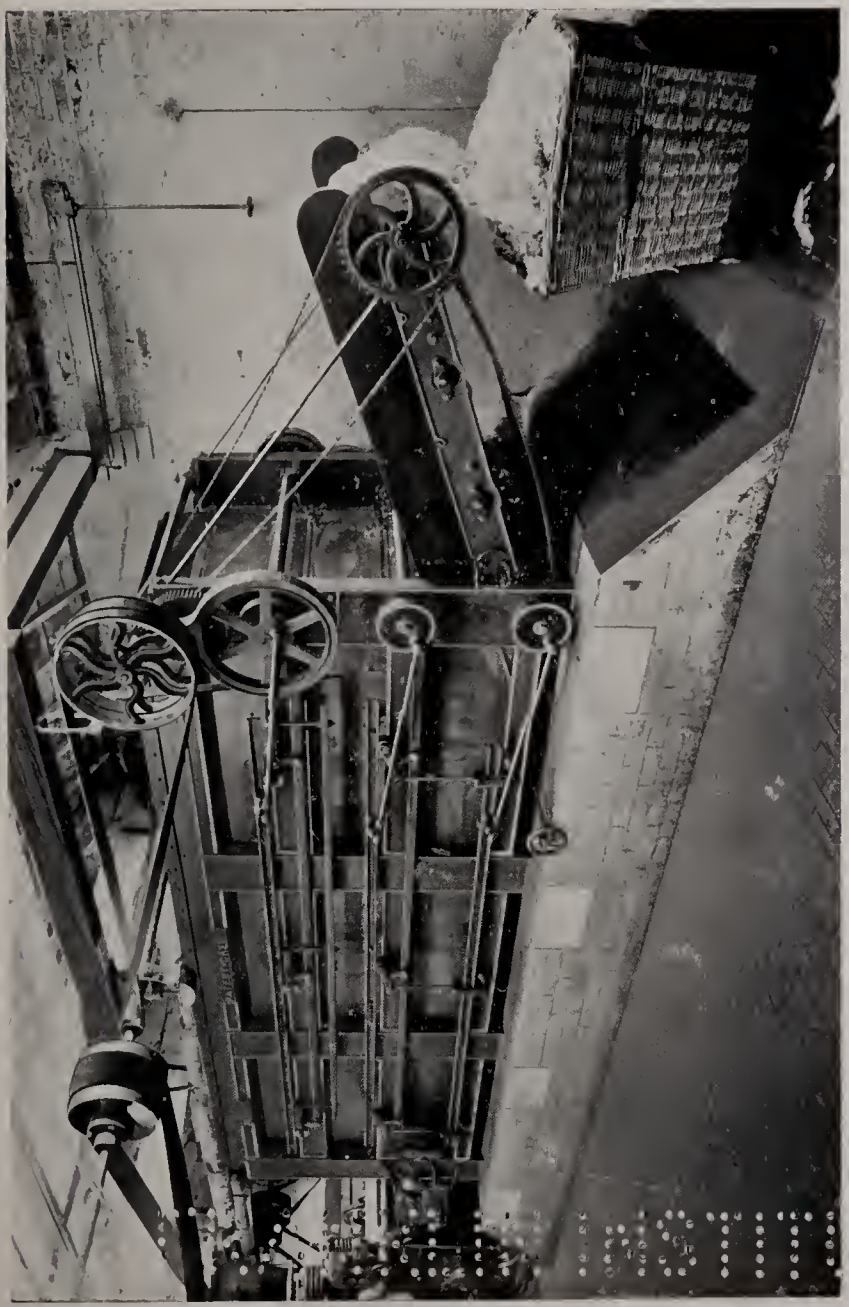

Plate V.

Petrie & McNaught's Wool Drying Machine.

In a somewhat similar manner the trays D are elevated and depressed. A cam compounded with the wheel I on its remote side is free to operate on the end of an outside rod N which connects at the point O, a small lever bracket P, pivoted at Q. The free end of P carries a stud and antifriction bowl R, on the surface of which the underside of the tray D rests. The cpposite end of the lever P is connected by rod S as shown to the next tray so that they act as a counterpoise to each other. The top tray is always separately balanced.

Duplicates of the parts N to S are repeated at the opposite side and respective ends of the machine, then by the constant reciprocating horizontal motion of N, the lever P is made to oscillate about the centre of the stud Q, through the connection described, when the bowl R, rises forward and falls with the backward movement of the rod N. The delivery brattice is shown at T, the steam trap at U, while the position of the 40″ fan and tubular heater are shown below the floor line V. The effect of this compound action is that the movable bars are raised above those which are stationary, and at the same time receive a forward impetus, thus slightly advancing the wool along the table. They are then depressed below the level of the fixed bars, and return to their starting point to renew their transporting function.

The wool enters the chamber of the machine by means of a travelling brattice A. The powerful current of air created by the fan lifts it from the apron on to the top table, where the united action of the movable bars conveys it to the opposite extremity, from whence it drops inverted on to the next table below, and this carries it back towards the point at which it entered. In this way it passes from one end of the machine to the other, descending from table to table until it reaches the lowest, which ultimately deposits it upon the delivery brattice T to be conveyed out of the chamber.

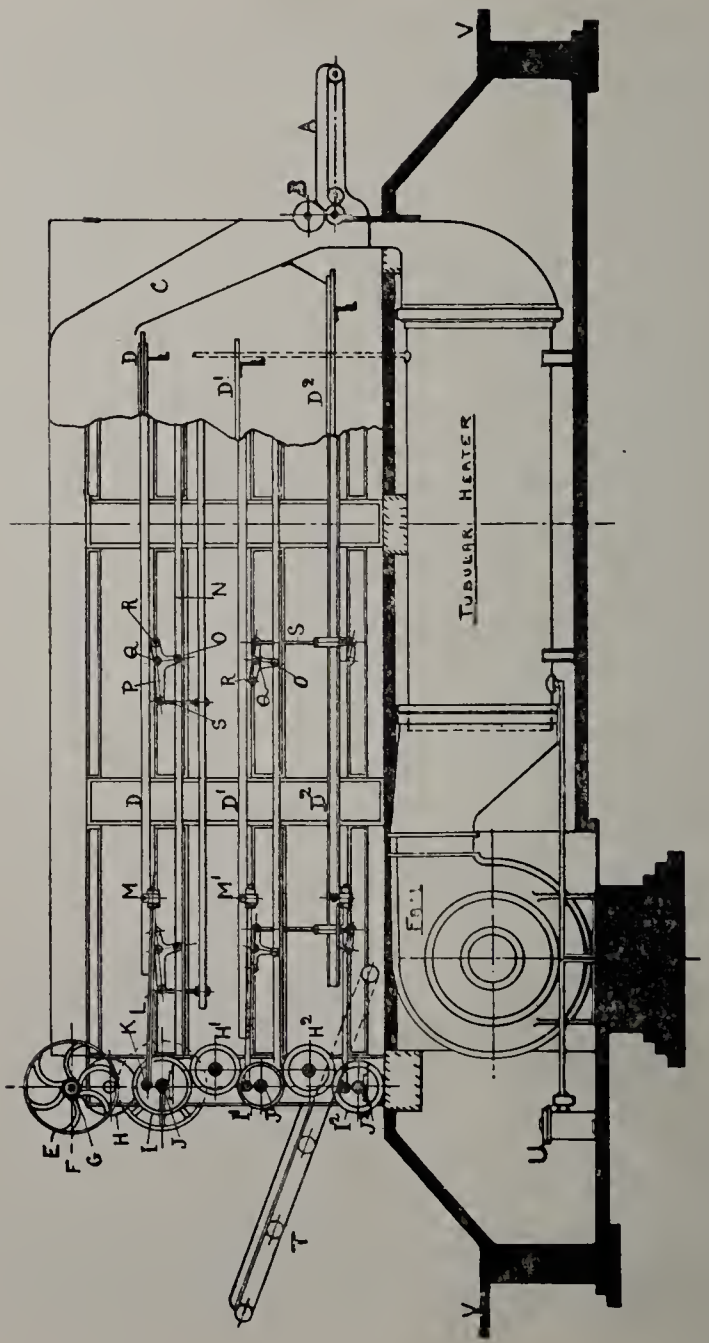

Fig. 37.

It is important to remember that when heated air is used as the drying agent, it is essential to have a continuous supply constantly passing over, or preferably through the wool.

Briefly the principle of drying embodied in the construction of this machine, and the processes performed are as follows :—

A multi-tubular heater is situated underneath the drying machine.

A powerful blast fan drives the air through this tubular heater and conveys the hot air through the medium of a funnel, to the uppermost division and first series of trays in the drying machine.

Simultaneously the washed wool from the squeezing rollers of the last bowl is received into the top division of the drying chamber.

The continuous blast and traverse of the hot air is in the same direction as the trays, upon which the wet wool is supported and conveyed.

Rapid evaporation thereby naturally occurs and because there cannot be any loss of moisture without loss of heat, the temperature of the air is gradually reduced during the full period of the traverse of the wool through the machine.

The resultant product is that the dried wool emerges from the drying machine in a cool and humid atmosphere. A condition which the makers claim to be an advantage.

The power required to drive the machine is approximately $\frac{1}{2}$ H.P., but the fan requires 4 to 6 H.P. The production or turn off of dry wool per hour is dependent on the machine used, the speed at which it is run, the rate of feeding, the pressure of steam in the heater and the amount of water in the wool, the maximum of which should not exceed 60% when the wool leaves the squeezing rollers of the scouring machine. The wool when it leaves the dryer should not contain more than

15% of moisture over the absolutely dry weight. Of the three sizes of machines made, the largest turns off over 500lbs. per hour; the medium exceeds 400lbs. and the smallest over 300lbs. per hour.

As an example of drying washed wool on a 3 table machine, intermediate size, 18ft. 6in. × 6ft. 3in., the following results were given :—

Steam pressure	52lbs.
Speed of drying	15 minutes
Wet weight of sample tested ...	256lbs.
Dry ,, ,, ...	176lbs.
Duration of trial	17 minutes
Moisture extracted	31%
Estimated dry condition ...	16%

The time required to dry the wool is equal to the period which any particular portion of wool occupies in passing through the machine, and this period is approximately 15 minutes.

99. The Textile Conveyor Wool Drying Machine. This machine is produced by the Textile Conveyor Company, Bradford, which specialises in this type of machinery. The framework of the machine is of rectangular formation; internally it is designed to contain 3 or 5 tiers of trays on which the wet wool from the wash bowls is deposited and conveyed to and fro through the drying chamber.

A sectional heater is constructed with 29×9 rows of steam pipes. This heater is inclosed within the drying chamber at the feed end. The steam pressure varies from 5 to 10lbs. per sq. in.

The essential features and principle of the "five tray" drying chamber are illustrated by the following line drawings. Fig. 38 shows a longitudinal elevation of the machine. Fig. 39 is a plan of same.

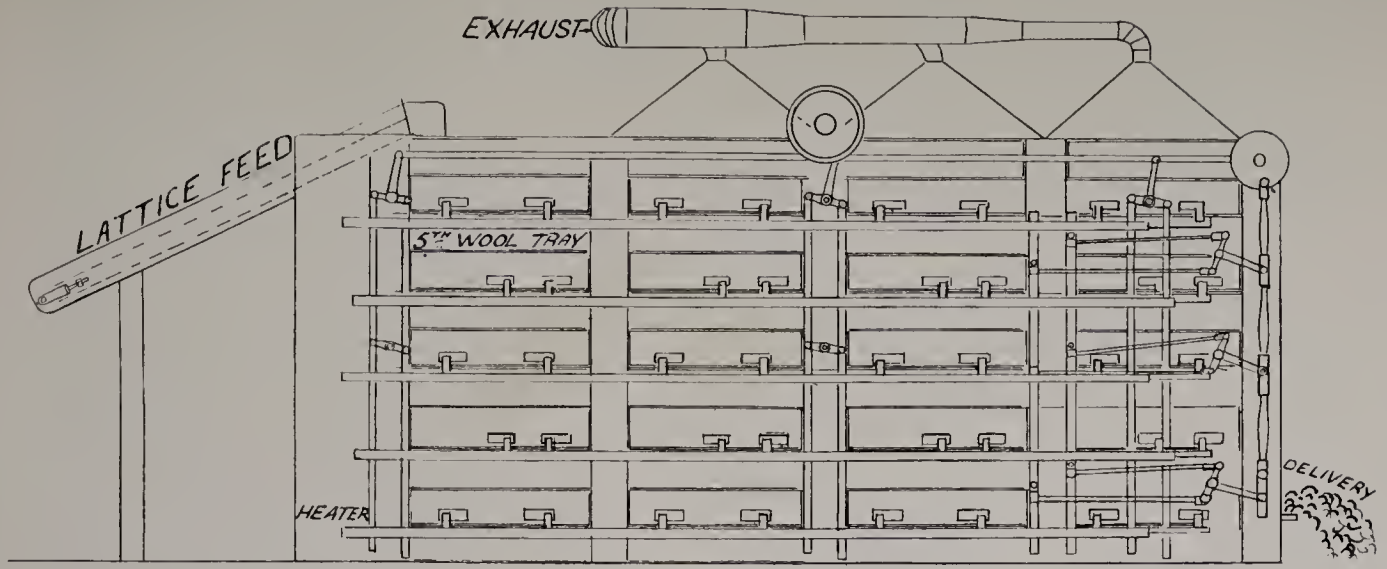

Fig. 38.

The Textile Conveyor Wool Drying Machine. Longitudinal Section of a fire tier drier.

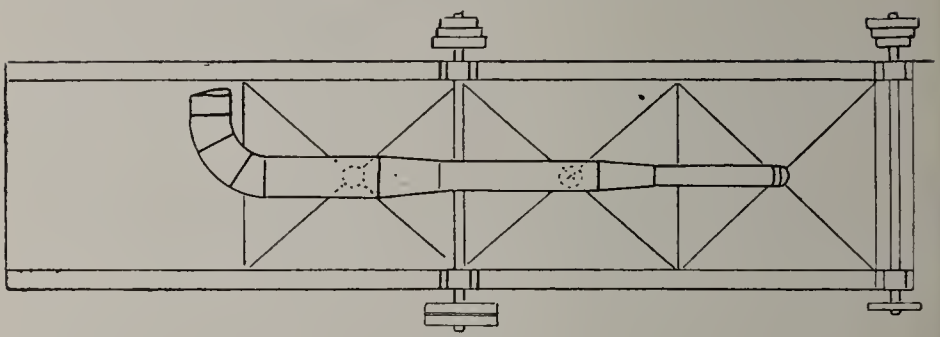

Fig. 39.
Plan of Textile Conveyor Drying Machine.

Fig. 40 is a sketch of a few of the channel bars forming part of one of the movable trays.

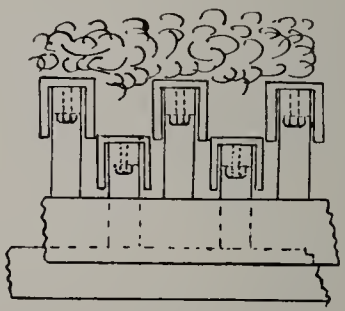

Fig. 40.
Channels of Drying Machine.

Fig. 41 is a sketch, in detached form, of the terminus of the feed funnel, with wool from the wash bowl ' into the reception chamber and delivery on to the uppermost or 5th movable tray of the drying chamber.

100. Principle and processing characteristics The clean washed wool from the last bowl, of the washing series, is absorbed and automatically conveyed through a large funnel into a wool reception chamber, situate at the top of the drying machine. The reception chamber is associated with the exhaust box and the feed lattice.

The wool as it emerges from the funnel floats freely about in the area of the exhaust box, and from which the excess of moisture escapes.

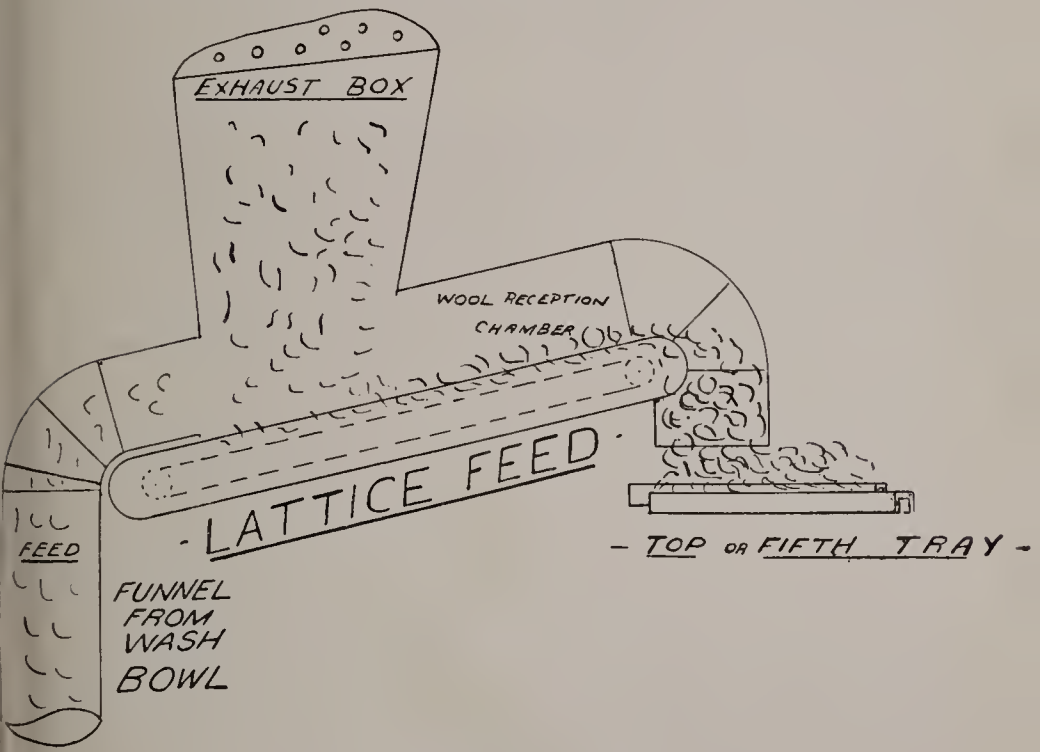

Fig. 41.
Reception Chamber of Drying Machine.

The wool gradually gravitates to the revolving feed lattice, from whence it is deposited onto the feed end of the uppermost series of channel bars forming the 5th tray.

There are five such trays in this machine, each of which is constructed of two sets of perforated channels or " bars." There are four sections in the length of each complete tray.

The alternate odd bars and also the alternate even bars are separately combined so that they may operate

independently but in sympathy with each other. There are 35 perforated channel bars across the full width of each tray. Each channel bar is approximate $1\frac{1}{2}'' \times 1\frac{1}{2}''$.

Each set of channel bars is free to rise and fall approximately 1″ and reciprocate a lateral distance of 5″. See Fig. 40.

Normally the wool falls on to the channel bars—the odd bars, being up and travelling forward, support and carry the wool forward a maximum distance of five inches. Next the odd bars fall and the even bars ascend and receiving the wool carries it forward for another five inches and so the wool continues.

A series of horizonatal air ducts are arranged in the framework of the machine and linked up with the heating chamber.

Outlets are provided in these to afford a free passage of hot air to enter each separate chamber underneath the reciprocating trays.

The wool in the drying process naturally forms a series of bridges across the alternate channels, the heat rises and passes through the perforation in the channel bars and also between the channel bars, until it eventually rises and passes through domes provided at the top of the machine, and into the exhaust.

Also when the wool is passed from one tray to another it gently falls over and exposes a new surface to the hot air, a contributory factor towards uniformity of treatment.

The hot air does not travel in the same direction as the wool, but rises through the layers of wool, during traverse through the machine. The moist air passes out of the machine at a point most remote from the dried wool.

The production varies from 700lb. to 1000lb. per hour, according to temperature and time of traverse through the the machine, *e.g.* A 45 mins.—110° to 120°.
B 35 mins.—130° to 140°.
C 25 mins.—150° to 160°.

CHAPTER XII.

WORSTED AND WOOLLEN YARNS: A COMPARISON.

101. *Wool suitable for Worsted or Woollen Yarns.* 102. *Structural differences between Worsted and Woollen Yarns.* 103. *Types of Cloth for which Worsted and Woollen Yarns are most suitable.* 104. *Differences of manipulation of Wool into Worsted or Woollen Yarn.* 105. *Illustrative differences between Worsted and Woollen Yarns.*

101. Wool suitable for Worsted or Woollen Yarns.

Up to this point the treatment which the wool receives may be said to be the same, irrespective of its variety or the purpose for which it is intended—that is to say, all wools used by the worsted or woollen spinner are sorted, washed and dried, and the same machines may be used for wools of a widely different character and intended for entirely opposite purposes. But from this stage a divergence begins, both with regard to the nature of the treatment and the character of the machines employed, according to the class of yarn it is desired to produce, or the special features of the wool which has to be used.

At this juncture it is necessary to consider the purpose for which the clean, dry wool is to be subsequently used—whether for woollen or worsted yarns, and if for the latter, with which this treatise especially deals, regard must be paid to the particular class of worsted to be produced.

Let it be distinctly understood that it is not necessarily the materials nor the classes of wool which are used that determine whether the yarn is woollen or worsted. The

distinction in each case is due entirely to the two modes by which the wool is worked into yarn. *e.g.*, Take a certain class of wool and follow out a given system of working, and the result is a woollen thread; again take the same class of wool and follow out other certain systems and the result is a worsted yarn.

102. Structural differences between Worsted and Woollen Yarns

In the worsted thread the fibres are all straightened out and laid parallel to each other, and the twist which is put into the thread is simply a general twisting of all the fibres round the central axis of the thread, the larger and shorter fibres being mixed with each other, throughout the length of the whole cross section. The shortest fibres having previously been extracted by the process of wool combing, partly explains the clearness of surface manifested by the worsted thread. In the woollen thread the fibres are not parallel, as in the worsted. The method employed in the manipulation determines that the longer fibres shall be arranged more or less along the central axis of the thread, but the shorter are thrown upon the surface, so that by this arrangement the fibres on the circumference present their serrated edges in almost every conceivable direction, and no fibres are extracted throughout the sequence of processes. Though it has been pointed out that the difference lies in the nature of the manipulation, it is advisable to state that the longer stapled wools are frequently reserved for worsted, and the shorter for woollen.

103. Types of Cloth for which Worsted and Woollen Yarns are most suitable

An important factor assisting the characteristics of these two yarns, and of deciding to which purpose the wool shall be put, is the felting and non-felting properties of the wool. The former of these properties is most adapted for woollen, and the latter for worsted. See Chap. VI.

Having thus far described the characteristics of each yarn, it remains to be stated to which class of fabric each is most adapted. To do this it is necessary to have some knowledge of the special features of the cloth required to be made.

The worsted is most suited for fine coatings, where a regular smooth surface is desired, and in goods where the weave structure is required to be displayed or pronounced, also in fancy worsteds, both for trouserings and suitings where it is necessary to preserve the individuality of each thread for the sake of the pattern. The smooth level worsted thread is calculated to best yield these results. Of course the character of the wool has much to do with this special lustre. Nevertheless it is only by the manipulation of the wool on the worsted principle that all these important features are preserved and their lustre shown to advantage.

On the contrary, where the lustre and visible appearance of the weave pattern are of no importance, as in the milled goods of the Melton, pilot, beaver and nap types, the construction of the woollen thread lends itself very readily, because it is most frequently made from wools which have the greatest felting properties. If a piece of milled cloth be examined under the microscope the fibres are seen to be so embedded into each other, that it is impossible to separate them without destroying the fibres themselves. In all cloths where it is required to conceal the individuality of the threads as quickly as possible, in order to obtain closeness of surface and "cover" for the finisher to operate upon, the woollen yarn is selected to meet this requirement.

Summarising the points of difference between these two yarns the worsted is characterised by its great regularity, whereas the woollen lacks somewhat this speciality. The latter of these is suited for milling purposes, but the structure of the former is unfavourable for this object. When woven into cloth the worsted

is smart and sharp in outline and somewhat cold, while the woollen is noted for its warmth, suppleness and durability—exclusive of the shoddy woollens.

104. Differences of manipulation of Wool into Worsted or Woollen Yarn. The different systems of mixing or blending the wool are worthy of comparison. Upon the woollen system, layers of the particular sorts of wool to be mixed are repeatedly made until a great pile is formed, and then a quantity as required is taken from the side of this heap and mixed in a Fearnought machine before any threadlike appearance is obtained, but in the worsted principle this process is performed mostly in the top.

The resultant and final thread in worsted is obtained from repeated drafts and doublings, but condensing (or dividing up) the whole film of sliver direct from the finishing card is the rule in woollen. In mule spinning for the woollen the drafting is intermittent, but in worsted spinning the drafting is continuous, and the twist in the former is largely put in during the time the back rollers and carriage are standing, or nearly so, but the spindles continue revolving. In the latter yarn this object is obtained by the difference in the speed of the spindle, and the rate of delivery by the front roller.

Further, worsted yarn may be spun to much greater fineness and regularity than woollen from the same material at about the same cost. Hence in this respect it is superior and more economical. Again in worsted spinning the speeds have been increased simultaneously with the perfecting of the machinery, but in woollen spinning the speed is limited by the intermittent action of the mule.

The introduction and perfecting of the worsted thread has considerably interfered with the production of *weave* effects in woollen fabrics, which now depend almost exclusively for their ornamentation upon colour blends

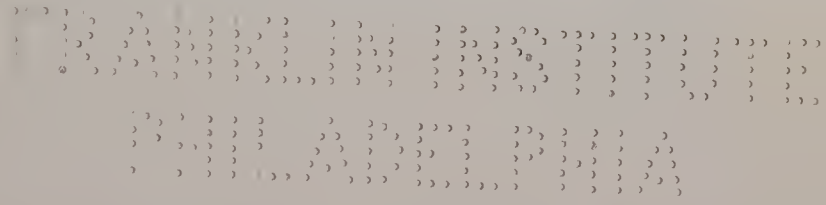

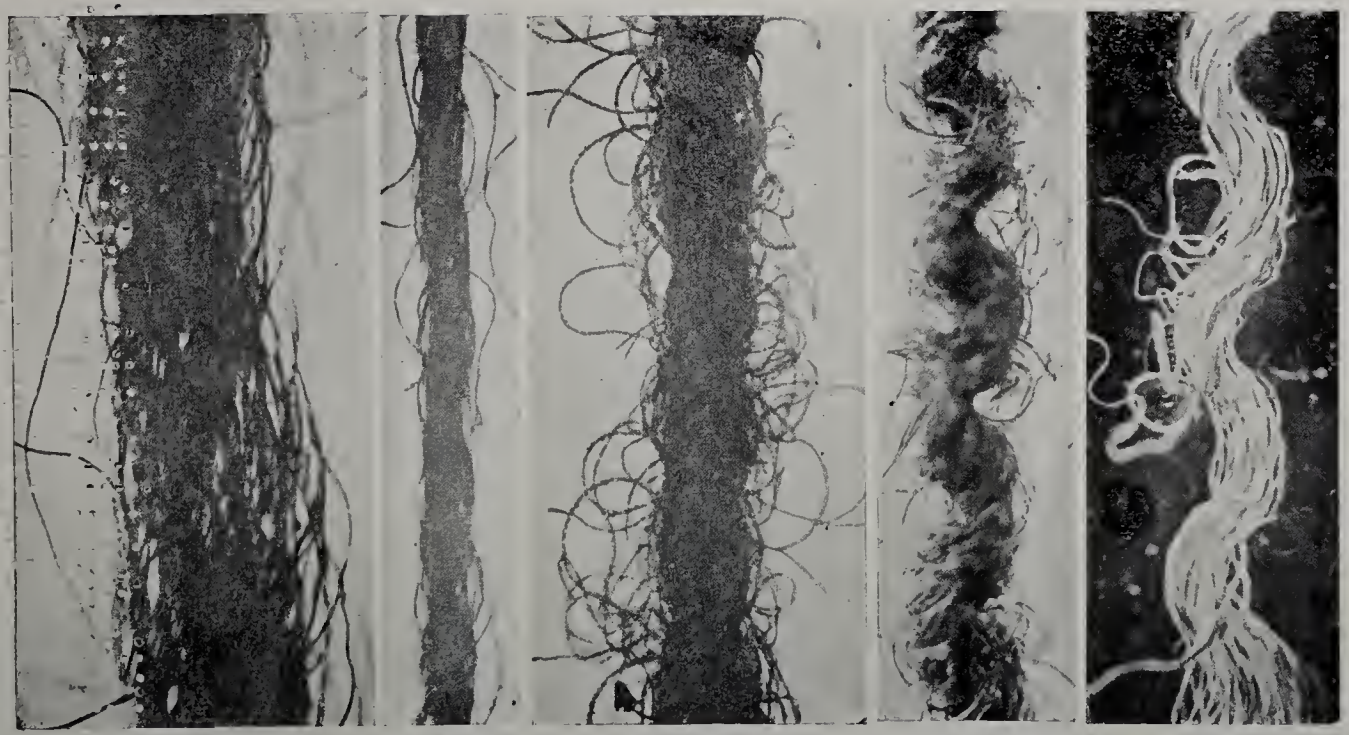

Plate VI.

Photo—Micro Graphs of Woollen and Worsted Yarns.

combined with weave. The obvious reason is that goods showing clearer and smarter definitions can be produced including superior style and finish than is possible in woollens. Whenever exclusive weave effect is to be produced it is necessary to use thick yarns and fancy twists, which open a field for the introduction of cheaper materials, and as a consequence give indirectly a stimulus to the production of low woollen and shoddy yarns.

105. Illustrative differences between Worsted and Woollen Yarns.

Photo-micrographs of typical woollen and worsted yarns are supplied at Plate VI.

A, represents a typical single-worsted thread;

B, a 2/56s worsted thread;

C, a typical woollen thread;

D, a woollen weft thread extracted from a dressed face cloth; and

E, a 1/36s worsted yarn extracted from a union cloth.

The essential points of structural difference in each yarn agree with the comparative description given above, and are sufficiently manifest as to require no further comment.

Part III.

WORSTED PREPARING.

CHAPTER XIII.

GILLING OR LONG WOOL PREPARING

106. *Different Systems of Preparing Wool for Worsted Yarns.* 107. *Gilling Machine Mechanism.* 108. *Plan of Rollers, Screws and Gearing Details of Gill Box.* 109. *Gill Box—Sectional Elevation of Rollers and Fallers.* 110. *Process of Gilling.* 111. *Setting of Machine.* 112. *Function and Importance of Fallers.*

106. Different Systems of Preparing Wool for Worsted Yarns.

IN the preparation of the worsted thread, three methods may be distinguished, each of which possesses some distinct peculiarity for arriving at a specific result—viz., preparing, which is specially suitable for the longer varieties of wool, carding and combing adapted for short wools, and carding without subsequent combing for the production of the softer hosiery and fingering yarns.

The long wool preparing will be first considered, the first process of which consists in passing the wool through a series of gill boxes whose function it is to break up the natural arrangement of the fibres and completely separate each from its neighbour, and also to

place them (as far as possible) parallel with each other. The machines are similar to each other in principle, but gradually get lighter in construction as the wool becomes more and more opened and the separation more complete.

107. Gilling Machine Mechanism. The distinctive features of each machine are a feed sheet, a pair of back or feed rollers with a slow motion, a set of steel combs called fallers, the surface speed of which is slightly faster than that of the feed rollers, a pair of front rollers known as the drawing rollers, the surface speed of which is greater than that of the fallers and much greater than that of the back rollers and a 'lap sheet' for the first 3 or 4 boxes.

Four to six machines constitute a set of preparers.

The fallers are carried by, and operate in, two pairs of screws—an upper and a lower pair. The upper pair is of finer pitch of screw than the lower and rotates in a direction which operates to move the fallers from the feed towards the nip of the drawing or delivery rollers. The lower pair of screws rotates in a direction to convey and return the fallers at an increased speed from the front to the back rollers. The fallers are transferred from the upper to the lower screws and *vice versa* by the rotating action of cams, fixed at the ends of the screw threads; springs are suitably placed to direct the fallers into their correct position.

Plate VII is a perspective view of a can gill box preparer.

108. Plan of Rollers, Screws and Gearing Details of Gill Box. Fig. 42 is a plan of the essential details of one of Messrs. Prince Smith & Sons' long wool preparing machines.

The respective details of mechanism are indicated by the following numerals, 1 shows the driving pulleys mounted on pulley shaft 2; 3 is a spurr pinion, compounded with shaft 2, which gears into a spurr pinion 4 fixed on shaft 5—denominated the back and main driving shaft of the machine. The

teeth of pinion 4 intermesh with those of stud wheel 6 compounded with a stud pinion 7, both free to rotate on an adjustable stud 8; the stud pinion 7 gears into and drives a second stud wheel 9, compounded with the stud pinion 10 both free, to rotate on the adjustable stud 11; the teeth of the stud pinion 10 intermesh with those of a fixed pinion 12, keyed fast to the shaft 13 and with which the fluted bottom or feed roller 14 is compounded.

The upper and lower screws are rotated as follows:— Bevels 15 and 16 compound with the driving shaft 5 respectively drive bevel wheels 17 and 18 secured to the respective ends of the bottom screw shafts 19 and 20. The upper screws are conversely driven by spurr pinions 21 and 22, compounded with the respective shafts 19 and 20, and gearing into like spurr wheels fast on the upper screw shafts. The screws are shown at 23 and 24 and the cams near the delivery roller at 25 and 26. A single faller in the bottom screws is shown at 27. The front or delivery roller is driven from the spurr pinion 28 fast on the driving shaft 5. Spurr wheels 29 and 30 are adjustable single intermediates to bridge the distance between the back driving shaft 5 and the spurr pinion wheel 31 compounded with the front roller shaft 32, and with which the fluted bottom roller 33 is also compounded.

109. Gill Box—Sectional Elevation of Rollers and Fallers.

Fig. 43. A diagrammatic section in elevation of additional parts of the first machine of the series. A and B are converging travelling aprons free to move in the direction of the arrows. C is the back or feed roller, D and E the upper and lower sets of fallers, F and G the screws which traverse the respective sets of fallers, H the front or drawing rollers, I a travelling and delivery leather which passes around the bottom roller H and the tension roller as shown. A second leather apron J, denominated the lap sheet

rotates around the rollers K and L in the direction shown.

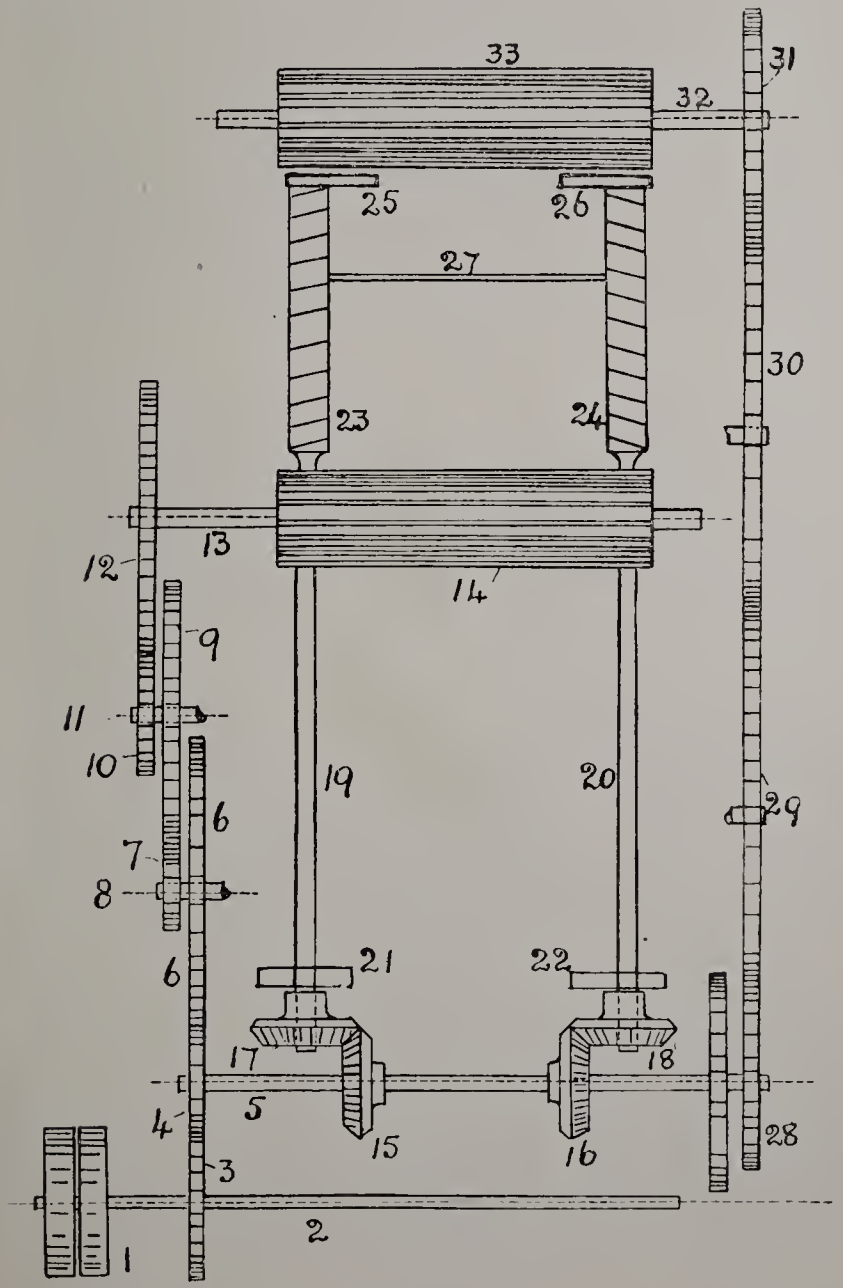

Fig. 42.

110. Process of Gilling. The loose clean wool is fed by hand on to the feed sheet A, Fig. 43. The converging leather B assists the leather A in directing the supply of wool into the feed rollers C. The placing of the wool between these aprons is a work which requires care and attention, because it is imperative that the fibres should enter the machine in as straight a condition as possible, so as to assist the rollers and fallers with their work and reduce to a minumim the breakages of the fibre. The more entangled it is the greater the strain put both upon the machine and the wool, and the amount of waste is materially increased.

The feed rollers bring the wool in its matted condition very slowly into the machine, where, soon after it emerges from the nip, it is met by the pins of the fallers. As it emerges from the back rollers, the tip of the staple is pierced by the first faller, which is travelling at a greater speed that than at which the wool is being brought through; the result is that the faller pins are drawn through the staple and the fibres are thus separated from each other at their tips. A second faller now rises, but penetrates the staple a little behind the point of the first; this in like manner is drawn away, and in this way the fibres are gradually separated. A number of fallers are successively drawn through the staple, and the result of their combined action is that the fibres become free and parallel. They are gradually released by the back roller and carried forward into the pins of the upper row of fallers to the front rollers, which receive and attentuate the sheet of wool thus formed, according to the relative speeds of the back and front rollers. The prepared wool immediately passes round the leather apron J, where it is made into lap form. This lap is put up at the end of the second box, and again from the second to the third, but at the end of this box it is gathered into the form of a sliver by passing it through a smooth, oval shaped funnel or trumpet (see Plate VII)

and then run through a pair of press rollers into a can. Six of these cans are put up behind the fourth, fifth and sixth boxes (when this number of boxes is used). Each machine draws out the six combined slivers to less than the thickness of any one of those put up the back of the machine. By these repeated doublings a more level sliver is obtained and by the repeated attenuations a finer sliver is produced. From the foregoing it will be manifest that the wool receives two distinct combings—one between the fallers and back rollers and the other

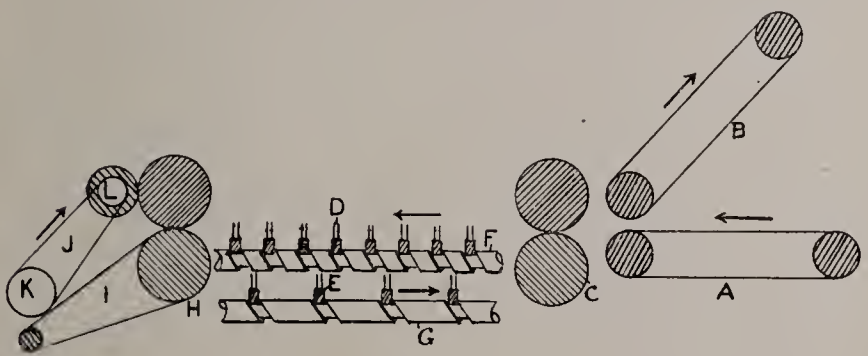

Fig. 43

between the fallers and front rollers. The first is done by degrees, one faller at a time; in the second, the fibre is pulled through a number of fallers. This is precisely what takes place in every gill box, and the proper relation of these to each other is what constitutes the difference between good and bad preparing.

111. Setting of Machine. The setting of the various parts of the machine is of great importance. The distance apart of the fallers and back rollers is a question which requires attention and the exercise of experience which is the outcome of careful observation combined with the dictates of common sense. The function of the fallers is to open the wool as gently as possible, and the pins should be therefore

set widely apart so as to allow of the free movement of the staples, for it should be remembered that they enter the machine lying in all directions, and crossed in every conceivable manner, and to change the fibres from such a condition as this to a state of parallelism cannot be accomplished without a careful adaptation of the parts and speeds of the machine, to the work which it has to perform.

112. Function and Importance of Fallers. Undoubtedly the most important part of the process of preparing is done by the fallers, which have to separate the fibres and rearrange them parallel to each other. This being the case, it is necessary that they should always be kept in good condition. Their points should not be allowed to wear off or continue to run after they have become split, for the simple reason that instead of passing between the fibres, the worn or split pins would catch them and lift them up. Then, when the fibres are seized by the rollers and drawn forcibly through the narrow slit, their surface is seriously damaged, many of the serrations are entirely removed. As the wool becomes more open and free, the setting of the pins may be increased; for example, beginning at the first box with $2\frac{1}{2}$, 3 or 4 per inch, at the second we might increase to five, at the third to six, and so on until at the last box there are about ten per inch. Each faller should have two rows, and the pins must alternate with each other. Recently, pins have been introduced with hardened points. At first sight it would appear that this must be a great advantage and materially increase their wear. They are too brittle, however, and very often break off just below the point when the matted wool is drawn through them. Their hardness prevents them being resharpened, and hence they have to be broken off or renewed. In the old kind of pins one advantage is that when the strain is too great they bend instead of breaking. When this occurs they are

easily straightened again by means of a faller pipe. The points also, when damaged or split, may be re-sharpened, so that practically—at any rate for preparing —they are the best. The level at which the fallers are set is a matter which requires some attention : the top of the bar should be just below the nip of both pairs of rollers, so that the wool is about a quarter or a half the height of the pins. This reduces considerably the amount of friction to which the fibres are subject, since they come into contact with nothing but a fractional part of the surface of the pins. Much trouble is often caused by the fallers locking fast. This may arise from several causes. The screws in which they run should not be allowed any " chase " in their bearing, or the cams which knock the fallers from one pair to the other may pass on one side, and so miss the faller altogether. A bent pin frequently makes the fallers lock, owing to it catching the next faller when it is being lifted up. The springs at the ends of the saddles should not be over-tight, but just sufficient to keep the fallers in position as they are being transferred from one traverse to the other.

CHAPTER XIV.

DRAFTING IN GILL BOXES.

113. *Draft.* 114. *Suitable Drafts.* 115. *Calculating the Draft.* 116. *Gauge Point.* 117. *Drafting Example —Total Draft.* 118. *Alternative Solution to* 117. 119. *Draft.* 120. *Exercises on Drafting.* 121. *Summary of Gilling and Drafting.* 122. *Knocking-off Motion.* 123. *Calculations on "turn-off" in Gill Boxes.* 124. *Fluted Rollers.*

113. Draft. It has been shown that the mechanism of Gill boxes consists essentially of two pairs of rollers rotating at different surface velocities, and the drawing, on the one hand, of the fallers through the wool, and on the other of the wool through the pins of the fallers, in order to effectually separate the fibres. It is often necessary to alter the relative speeds of the rollers in order to facilitate the working of the wool, or maybe to prevent its breakage. This is what is technically known as "altering the draft."

"Drafting" consists in reducing the weight or thickness of the lap or sliver by the relative action of two pairs of rollers. "Draft" is defined as the number of yards made out of 1 yd.; thus, if 1 yd. goes in at the back rollers and 1 yd. comes out at the front, it is termed "1 of a draft"; similarly, if 1 yd. be converted into 4, it equals "4 of a draft"; or 1 into 6 is "6 of a draft," and so on.

From what has been previously said it will be seen that the draft of preparers—and, indeed, all gill boxes—is, strictly speaking, a compound factor made up of the draft between the fallers and the back rollers in the first instance, and also between the front rollers and fallers. That between the back rollers and fallers is termed the

back draft, the other being known as the front, and each of them must be varied to suit the requirements of the wool.

114. Suitable Drafts. In the earlier stages of preparing, the draft at the back should be in excess of the front, so as to open the wool gradually without any harsh or violent treatment. It should, however, be reduced as the separation of the fibres becomes more complete, and the work of straightening assigned to the front rollers, by which it can be accomplished more efficiently. This is done in order to relieve the fallers of the strain which must necessarily be placed upon them when they are drawn through the wool; and since the pull is in the opposite direction to that in which they are travelling, it renders them more liable to lock, besides causing their ends to wear against the threads of the screw.

Two sets of drafts suitable for long lustre wools and medium cross-breds are here given, but it must be understood that these are of necessity only approximate, because scarcely two classes of wool will require precisely the same treatment, or will be able to bear the same amount of draft. In the case of those which are very matted it is advisable to give a short easy draft at the first two operations in order to reduce to a minimum the breakages of the fibre. Of course it is impossible to avoid breaking some of them; but still, by a judicious arrangement of the fallers and rollers this danger may be considerably minimised.

For Cross-bred Wools.			For Long Wools.		
Front Draft.		*Back Draft.*	*Front Draft.*		*Back Draft.*
$2\frac{1}{2}$	...	$3\frac{1}{2}$	$2\frac{3}{4}$	...	4
3	...	4	3	...	5
$4\frac{1}{2}$	...	3	4	...	$4\frac{1}{2}$
5	...	$2\frac{1}{2}$	$5\frac{1}{2}$	...	3
6	...	$1\frac{1}{2}$	6	...	$2\frac{1}{2}$
7	...	$1\frac{1}{4}$	8	...	$1\frac{1}{2}$

115. Calculating the Draft. In order to be able to make the necessary calculations which are involved in arranging the relative speeds of the rollers and other portions of the machine, we must have some knowledge of the relation which the wheels and pulleys, etc., bear to each other, and the effect they produce when enlarged or decreased, according to the position which they occupy in the combination. Wheels in general may be arranged into three groups. In the first of these may be placed those which, when increased in size give additional speed or a greater result; these are usually termed drivers. The second includes wheels which when they are enlarged give less speed or a smaller result, *e.g.*, take two pulleys, one of which is 90 in. in circumference and the other 20 in. If these be placed face to face and then caused to revolve, it will be evident that the smaller pulley will just make four and a half revolutions while the other is completing one. But if now its size be increased from a 20 to a 30 it will then make three revolutions for the other one; so that by enlarging it, the speed has been decreased. On the other hand, if the 20 pulley be retained but the 90 enlarged to 100, then while this is revolving once the 20 will revolve five times—which is therefore an increase in speed. Thus the large pulley is a driver, while the small one is driven. In the third group those wheels are placed which merely transmit the same motion they receive. These are termed intermediates, and are used in order to connect the adjustable parts of the machinery.

Examples of their application are given in the succeeding method of finding the draft. A little observation will enable anyone to readily analyse the wheels turning the different portions, and after this has been done they should then be arranged according to the effect which they produce—*i.e.*, whether they yield more or less speed, etc. In a combination where two or more pairs of rollers have to be considered, either the diameter or the circum-

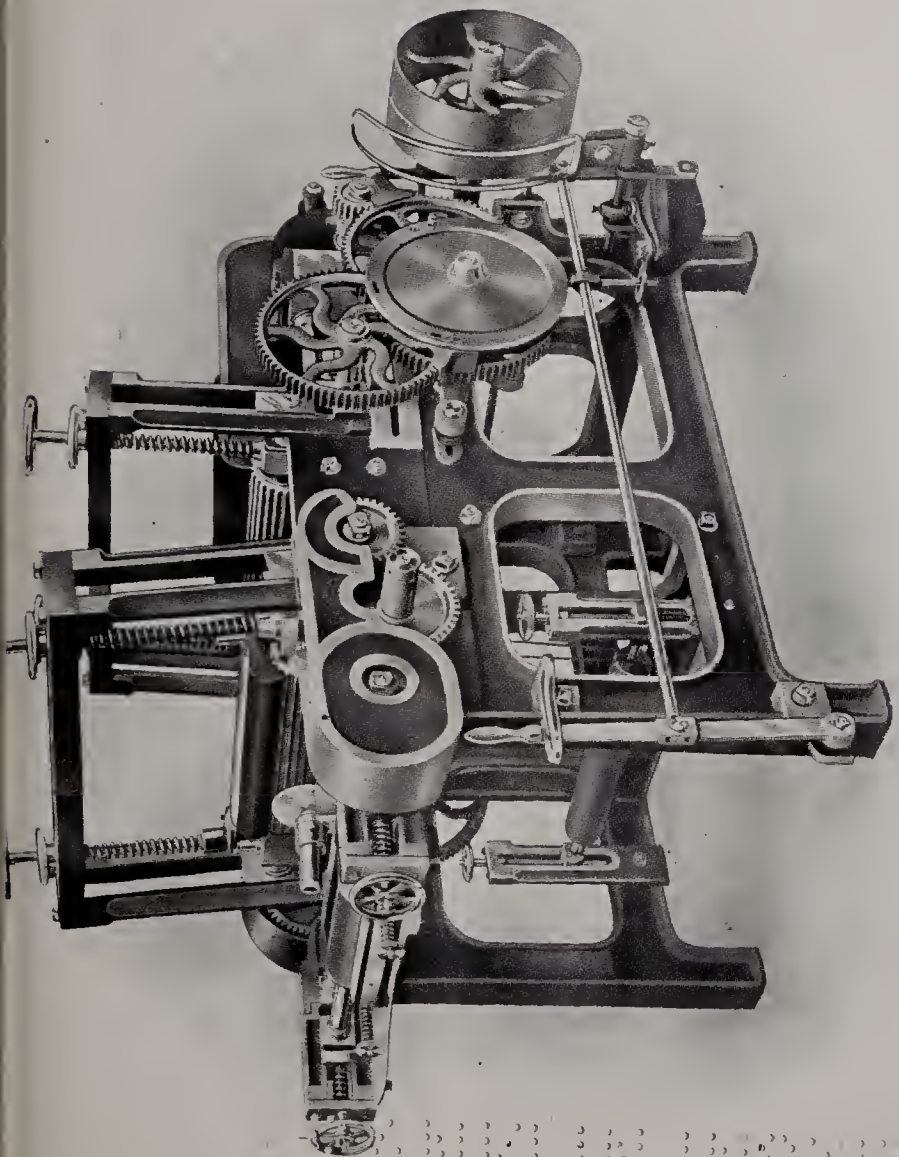

ference, in every case must be taken. The circumferences of any two given wheels always vary in the same ratio as their respective diameters, therefore it is immaterial for purposes of calculation, whether diameters or circumferences be taken. They however must all be taken on the same basis.

In making mechanical calculations, especially where numerous wheels have to be taken into consideration, much time may be saved by finding what are usually termed *gauge* points.

116. Gauge Point. A gauge point is a standard number which is a simple equivalent to all the *constant* factors in any set of problems.

The person who has to superintend the working of the foregoing machines can easily formulate his own "Gauge Point," when once he has fully grasped the essential principles and method of working out the drafts. The gauge point will be found by leaving out the change wheel in each of the following calculations, since that wheel is the only variable factor. To find the change wheel required to produce any given draft it will only be necessary to divide the draft by the gauge point. To find the draft multiply the gauge point by the number of teeth in the change wheel.

Fig. 44 is a sectional plan of a can gill preparing box, to illustrate the draft gearing.

117. Drafting Example. —Total Draft Find the total draft in a Single Can gill box, when the trains of wheels are as follows :—

The letters in Fig. 44 and in the given examples refer to corresponding details.

Let draft change wheel W contain 50 teeth.

Front roller		,,	F	,,	70	,,
Back shaft		,,	S	,,	15	,,
Double stud	{	,,	DS	,,	70	,, driven
	{	,,	DS	,,	15	,, driver

Back roller wheel R contains 70 teeth.
Diameter of back roller ... 3 inches.
,, front ,, ... 3 ,,
Bevels driving screws ... 24 teeth.
,, on screws ... ... 18 ,,
Pitch of screws ... ... $1\frac{1}{2}$ inches.

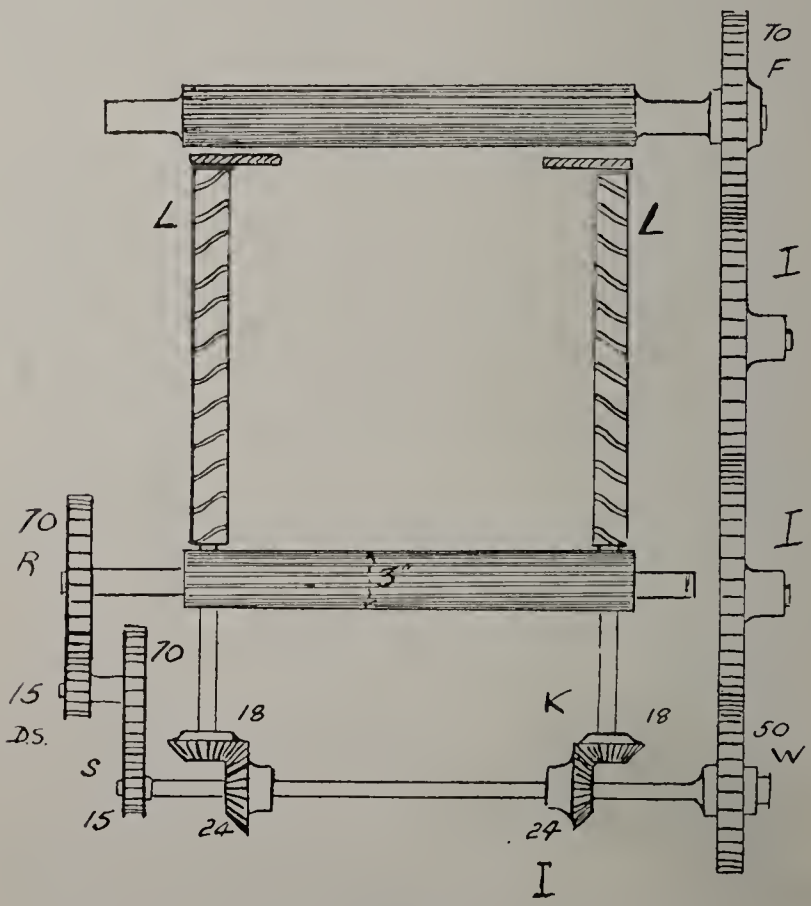

Fig. 44.
Part plan of the Draft Gearing in a Can Gill Box.

Then the formula for ascertaining the draft may be deduced as follows:—Those wheels or factors which, *if increased*, would produce *more* draft, are placed in

the numerator; while those which *if increased* would produce *less* draft are placed in the denominator thus :—

$$\text{Total Draft} = \frac{\text{More}}{\text{Less}} = \frac{\text{W Draft Wheel} \times \text{DS Stud Wheel} \times \text{R Back Roller Wheel} \times \text{Dia. of Front Roller}}{\text{Front Roller Wheel F} \times \text{Stud Pinion DS} \times \text{Back Shaft Wheel S} = \text{Dia. of Back Roller}}$$

$$\text{,, ,,} = \frac{\text{More}}{\text{Less}} \frac{50 \times 70 \times 70 \times 3''}{70 \times 15 \times 15 \times 3''} = 15{\cdot}44$$

$$\text{Back draft} = \frac{\text{More}}{\text{Less}} = \frac{\text{DS Stud Wheel} \times \text{R Back Roller Wheel} \times \text{Bevel Driving Screws} \times \text{Pitch of Screws}}{\text{Stud Pinion DS} \times \text{Back Shaft Wheel S} \times \text{Bevel on Screws} \times \text{Circ. of Back Roller}}$$

$$\text{,, ,,} = \frac{\text{More}}{\text{Less}} = \frac{70 \times 70 \times 24 \times 1{\cdot}5}{15 \times 15 \times 18 \times 9{\cdot}4} = 4{\cdot}58$$

$$\text{Front draft} = \frac{\text{More}}{\text{Less}} = \frac{\text{W Draft Wheel} \times \text{Bevel on Screws} \times \text{Circ. of Front Roller}}{\text{Front Roller Wheel F} \times \text{Bevel Driving Screws} \times \text{Pitch of Screws}}$$

$$\text{,, ,,} = \frac{\text{More}}{\text{Less}} = \frac{50 \times 18 \times 9{\cdot}4}{70 \times 24 \times 1{\cdot}5} = 3{\cdot}36$$

Total draft = Back draft × Front draft = $4{\cdot}58 \times 3{\cdot}36$ = $15{\cdot}38$ Approx.

The *gauge point* for the total draft in the above machine is 0·31, which the student might prove :—

Then total draft = G.P. × Draft wheel (W) = $0{\cdot}31 \times 50 = 15{\cdot}5$
Draft wheel = Total draft ÷ G.P. = $15{\cdot}5 \div 0{\cdot}31 = 50$.

118. Alternative solution to 117.

$$\text{Draft} = \frac{\text{Surface speed of Delivery roller.}}{\text{Surface speed of feed or back roller}}$$

Considering one revolution of back roller,

$$\text{Total Draft} = \frac{R}{70} \times \frac{DS}{70} \times \frac{W}{50} \times 3'' \times C \Big/ \frac{S \quad DS \quad F}{3 \times C} = 15 \cdot 55$$

where C = constant for determining the circumference of fluted roller.

$$\text{Back draft} = \frac{I \quad L \quad DS \quad R}{24 \times 1 \cdot 5 \times 70 \times 70} \Big/ \frac{}{15 \times 1 \times 15 \times 18 \; 3 \times C} = 4 \cdot 61 \text{ approx.}$$
$$S \qquad\quad DS \quad K$$

$$= \frac{\text{Surface speed of screw gill}}{\text{surface speed of back roller}}$$

$$\text{Front draft} = \frac{W}{70} \times \frac{K}{18} \times \frac{3 \times C}{1 \cdot 5} = 3 \cdot 37 \text{ approx.}$$
$$F \qquad I$$

$$= \frac{\text{Surface speed of front roller}}{\text{Surface speed of screw gill}}$$

Total draft = Back draft × Front draft.

$$\text{Total draft} = \left\{\frac{24 \times 3 \times 70 \times 70}{15 \times 2 \times 15 \times 18 \times 3C}\right\} \times \left\{\frac{50 \times 18 \times 3C \times 2}{70 \times 24 \times 3}\right\}$$
$$= 15 \cdot 55$$

N.B.—In this example C is taken as equivalent to $\pi = \frac{22}{7}$ but for absolute accuracy the circumference can be obtained by passing a tape through the nip of the rollers.

119. Draft. This example is given to illustrate the method of obtaining the draft in a single screw gill box of a slightly different arrangement from that of the foregoing.

Fig. 46 shows the train of wheels communicating motion to the front roller.

Fig. 47 shows the arrangement of the train of gears which drive the back rollers.

Fig. 48 shows the bevel I on the upper back shaft geared into the bevel K on one of the screws.

The remaining bevels are respectively duplicates of the above two.

A—Wheel on upper back shaft, 20-teeth, driver.
B—First stud wheel, 75-teeth driven.
C—First small stud pinion, 24-teeth, driver.
D—Second stud wheel, 75-teeth, driven.
E—Second stud pinion, 27-teeth, driver.
F—Wheel on back roller shaft, 75-teeth, driven.
G—Change wheel on upper back shaft, 29-teeth, driver to front roller wheel H.
H—Wheel on front roller, 72-teeth, driven.

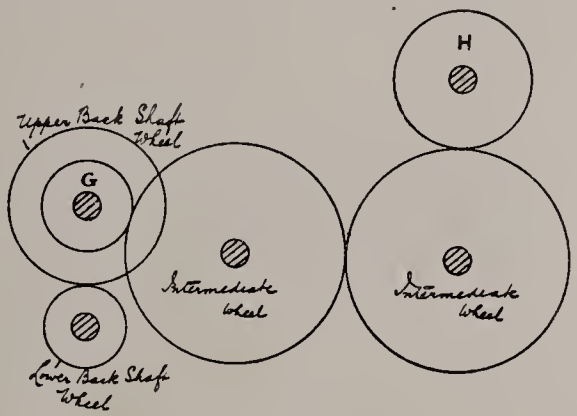

Fig. 46.
Gear drive to Front Rollers.

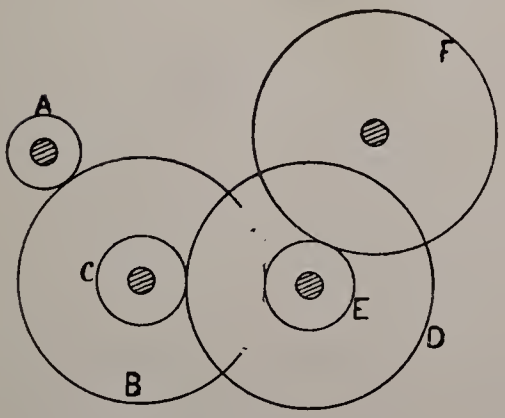

Fig. 47.
Gear drive to Back Rollers.

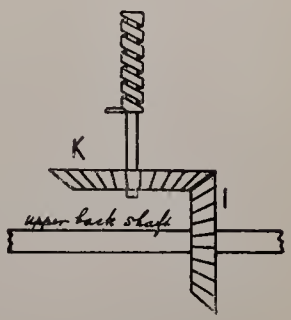

Fig. 48.
Bevel Gear Driving Screws.

The two intermediate wheels have no influence upon the draft.

I—Bevel wheel driving screw, 20-teeth, driver.
K—Bevel wheel on end of screw, 24-teeth, driven.
Pitch of screw 1·25 inches.
Diameter of back rollers 3ins.
Diameter of front rollers 3ins.
Draft in entire box =

(M) More $\frac{B \times D \times F \times G \times \text{dia. of front roller.}}{A \times C \times E \times H \times \text{dia. of back roller.}}$
Less

Draft between back rollers and fallers=

(N) More $\frac{B \times D \times F \times I \times \text{pitch of screw.}}{A \times C \times E \times K \times \text{circumference of back roller.}}$
Less

Draft between front rollers and fallers=

(O) More $\frac{G \times K \times \text{circumference of front roller}}{H \times I \times \text{pitch of screw}}$ or $\frac{M}{N} = O$
Less

The actual solution of the problem in figures is as follows :—

Draft in the entire box=

More $\frac{75 \times 75 \times 75 \times 29 \times 3}{20 \times 24 \times 27 \times 72 \times 3} = 13 \cdot 1$
Less

Draft between the back rollers and fallers=

More $\frac{75 \times 75 \times 75 \times 20 \times 1 \cdot 25}{20 \times 24 \times 27 \times 24 \times (3 \times 3\frac{1}{7})} = 3 \cdot 6$
Less

Draft between the front rollers and fallers= $\frac{13 \cdot 1}{3 \cdot 6} = 3 \cdot 64$

or More $\frac{29 \times 24 \times (3 \times 3\frac{1}{7})}{72 \times 20 \times 1 \cdot 25} = 3 \cdot 64$
Less

120. Exercises on Drafting. Exercise 1. Prove that M=10·6; N= 3·63; O=2·92 with the following particulars. The lettering refers to corresponding parts in example 2. A has 28 teeth; B, 70; C, 22; D, 70; E, 24; F, 70; G, 32; H, 70; I, 18;

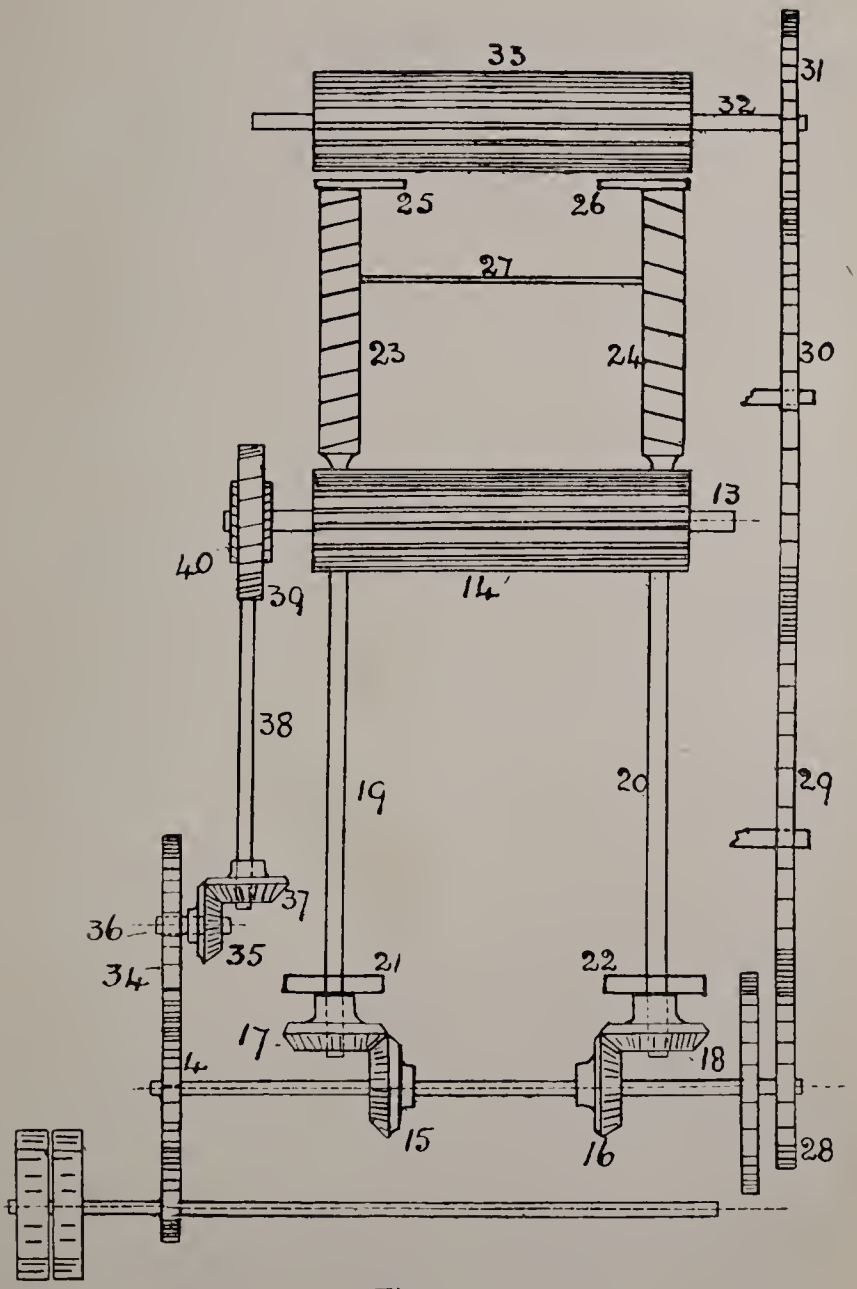

Fig. 49.
Plan view of Gill Preparing Box.

K, 22%; Pitch of screw, 1·5 inches; Diameter of back and front rollers, each 2·5 inches.

Exercise 2. The total draft between the back and front rollers for the gill box preparer, illustrated at Fig. 42, is 44·6. Work out separately the back and front drafts for this machine, when the following details are given :—

Wheel 4 contains 17 teeth; wheel 6 contains 78 teeth
,, 8 ,, 18 ,, ,, 9 ,, 78 ,,
,, 10 ,, 25 ,, ,, 12 ,, 78 ,,
,, 15 ,, 18 ,, ,, 17 ,, 20 ,,
,, 28 ,, 36 ,, ,, 31 ,, 50 ,,
Pitch of screws 23 and 24 = $1\frac{3}{8}$ inches.

Diameter of back and front rollers, 14 and 33 = $3\frac{1}{2}$ inches.

Exercise 3. Fig. 49 is a plan view of a gill box preparer fitted with a single worm drive to the back rollers. The same numerals in this diagram refer to corresponding parts detailed in Fig. 42 and the number of teeth in the respective wheels and dimensions of rollers and screws are the same as those supplied in Exercise 2. The chief points of difference, size of wheels, are as follows :—

Wheel 4	contains	27 teeth
Stud wheel 34	,,	42 ,,
Stud pinion bevel wheel 35 ...	,,	18 ,,
Bevel wheel 37 on worm shaft	,,	20 ,,
Worm 39 on worm shaft ...	,,	1 tooth
Worm wheel 40, on back shaft 13	,,	36 teeth

The total draft is 44·8. Prove the same and find the back and front drafts.

121. Summary of Gilling and Drafting. In preparing the success of the operation, as in every other machine-primarily depends upon the proper adjustment of all the different parts to each other, and also upon a careful division of the

labour, so that each machine has a specific duty to perform. Broadly speaking, three objects have to be kept in view during the process—first, the fibres must be separated, then arranged parallel with each other, and afterwards converted into a series of slivers or ends of equal thickness. Much of the opening is done at the first two operations, and here both pairs of rollers should be set well away from the fallers so as to render the work easier and enable the staples to be treated by degrees. An excessive draft at this stage should be scrupulously avoided, otherwise the fibres will be much broken because here it is in the worst possible condition for drafting, as the fibres are lying in all directions and are also very much entangled. The wool fibres should be humoured into position rather than forcibly drawn from each other. For this purpose the setting of the pins of the fallers should be very coarse, about $2\frac{1}{2}$ to 4 per inch being ample. At the first operation, instead of fallers, some prefer to substitute a porcupine roller, which they argue reduces the breakage of the wool and opens it much more efficiently. As the thin web of wool leaves the delivery rollers at the first few boxes it is wrapped around an endless leather apron until a lap of several layers is formed. The shorter staples have not yet been treated, but they are arranged so that the fallers of the succeeding boxes readily engage them and separate the fibres. At the third machine the wool, after leaving the front roller, passes through a pair of smooth-faced press rollers which conduct it into a can. By means of the 'knocker-off' a definite length is placed into these cans, and their weight ascertained so that a certain degree of uniformity may be given to the slivers. A number of these cans are then taken and put up at the back of the fourth machine, to be drafted into one smaller than any of those taken. Of course, the thickness of the sliver to be produced, together with the amount of draft which the wool will bear, determine the number of ends to be put up at the back. This is a question which requires a little con-

sideration. It should be made a fixed rule in preparing that no more draft should be given than is absolutely necessary to secure the opening of the staples, because the more violently the fibres are drawn over each other or through the pins of the fallers, the greater will be the friction on their surface. This repeated attrition cannot fail either to injure or displace the external flattened cells which constitute the outside of the fibre; and since the successful spinning of the wool is in a great measure dependent upon the resistance which these scales exert when the fibres are drawn over each other in opposite directions, the importance of carefully preserving them from injury will be at once recognised. Another and probably more weighty objection from a manufacturer's point of view is the material reduction in the turn-off which ensues when excessive drafting is adopted; further than this, the increased wear and tear on the fallers and leathers is a consideration which cannot be ignored in fact, scarcely any valid reason can be assigned for submitting the wool to the long drafts which in many instances are adopted at this stage of its manufacture.

To ensure the production of a regular sliver, *the ends should first be drafted in one direction and then in the other*, so as to secure a proper distribution of the long and short fibres, which, together with the repeated doublings at each operation, cannot fail to remove, to a great extent, any inequalities which may exist. This successive drafting and doubling is one of the peculiarities of worsted spinning and plays a very important part in the making of the thread. For example, assume that at the last three operations eight ends are up at each, then this alone will give $8 \times 8 \times 8 = 512$ distinct doublings. The aim should be, when once the draft and weight of the ends have been decided, to get as many doublings as it is possible, because then the fibres will be better distributed. The fourth machine should be made a "weigh box." Here the cans are averaged into sets,

which will be best explained by taking an example. Assuming that eight cans are put up at the fifth operation, and the total weight of sliver is 96lb., then each can should contain 12lb. It is impossible, however, in practice to get the exact weight in each, so that those which are heavy have to be ranged with light ones and made up at 96lb. Thus, whatever may be the weight of the individual cans, the total is always the same.

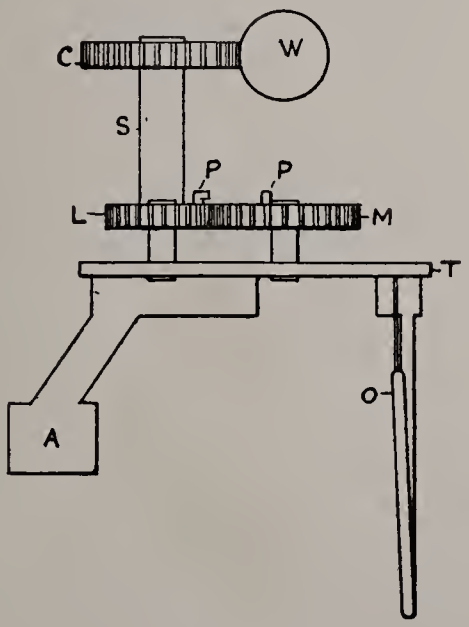

Fig. 50.

122. Knocking-off Motion. A very important and essential accessory to the preparing box is the knock-off motion, which automatically stops the machine when a previously determined length has been delivered. The type usually employed consists of three wheels, two of which are attached to a short vertical shaft, while the third works on an independent movable stud. A reference to Fig. 50 will give some idea of its arrangment. W is a worm fixed on to the shaft of the front roller, which gears into the change

worm wheel C on the top of the shaft S. The wheels L and M which work in conjunction with each other, have pegs P, P^1 fixed on their upper surface. These project slightly over the teeth, and engage each other after a certain number of revolutions have been made. When this occurs, the wheel M is pushed out and releases the spring O, which then acts on the stop rod and causes the driving strap to move from the fast pulley on to the loose one. The whole of the above rests upon the table T, which is secured to the framework of the box by means of the bracket A.

The principles upon which this knock-off motion is based require a few words of explanation, because in the majority of cases although many persons are acquainted with the method of estimating the length, very few indeed know the reason for the course taken. In the first place, its action depends upon the wheels L and M meeting together after making a certain number of revolutions, which must, of course, be determined by the relation which they bear to each other. Now, if one is a multiple of the other, it will be clear that they will knock-off after they have completed their relative number of revolutions—that is to say, assuming that M is a 100-wheel and L a 20; then after L has made five revolutions and M one, the pegs will engage and release the spring, and this would therefore occur at every revolution of M. From this, then, it will be seen that these wheels must have no common relation, so that the maximum number of revolutions must be made before the pegs meet. Taking two wheels of this class, the revolutions of one will be governed by the number of teeth in the other. For instance, let L be a 21 and M a 37; then L will revolve thirty-seven times and M twenty-one before they arrive at the starting point, so that whatever be the size of the wheel M, it determines the revolutions of L. This being so, then the change wheel, no matter what its size may be, must also

make a definite number of revolutions. Here, then, is the key to the question. Preserving the above wheels, and taking the change wheel as a 50, this also will have to make thirty-seven revolutions. Now, every time the front roller revolves, the diameter of which is $2\frac{1}{2}$ inches, the worm will take one tooth of the change wheel, which means that before the box knocks off, the change wheel must make 37 revolutions and every revolution of the change wheel is equal to 50 revolutions of the front roller, *i.e.*, equal to the number of teeth which the change wheel contains. The whole expressed in yards of sliver is equal to

$$\frac{50\times37}{1}\times\frac{5\times22}{2\times7}\times\frac{1}{36}=403\cdot8 \text{ yards.}$$

The formula then is :

$$\frac{\text{Change wheel} \times \text{revs. of change wheel} \times \text{circum. front roller}}{\text{Inches per yard.}} = \text{length in yards.}$$

123. Calculations on "turn-off" in Gill Boxes. Assume the third gill box is required to produce 50lbs. per hour; the lap behind the box weighs 1lb. per two yards. Dia. back roller $3\frac{1}{2}$", front roller 3", pitch of screw $1\frac{1}{4}$".

$$\text{Then } \frac{2 \text{ yards lap} \times 50\text{lbs. per hour} \times 36\text{" per yard}}{60 \text{ minutes per hour.}} = 60\text{" per min.}$$

This therefore involves the following speeds :—

Back roller, $3\frac{1}{2}$" diameter=11" circumference, therefore

$$\frac{60''}{11} = 5\cdot45 \text{ revolutions.}$$

Fallers rising 120 per minute, pitch of screw $1\frac{1}{4}$".
∴Traverse of fallers per minute=$120\times1\frac{1}{4}=150$".

Back draft ∴ $=\frac{150}{60}=2\frac{1}{2}$. Front draft assume 5.

Front roller, 3" diameter=9·4" circumference. Therefore surface speed of front roller must=150" (speed of fallers)×5 draft=750" per minute. Then $\frac{750''}{9\cdot4}$=80 revolutions (approx.) per minute.

Then the fourth box, to do what the third box turns off must have the following speeds :—
Given 8 ends up

$\frac{750}{8}$ = 93·75″ = reduced length of sliver for given weight.

Back roller $3\frac{1}{2}$″ diameter = 11″ circum., $\frac{93{\cdot}75}{11}$ = $8\frac{1}{2}$ revs.

Then with a back draft of $1\frac{1}{2}$ the traverse of fallers = $1\frac{1}{2} \times 93{\cdot}75 = 140$″ per minute.

Fallers rising with $1\frac{1}{4}$″ screw = $\frac{140}{1\frac{1}{4}}$ = 112 per minute.

Further, if the front draft is 6 the safest speed of the front rollers must = $140 \times 6 = 840$″ per minute.
Front roller, 3″ diameter = 9·4″ circumference.
Then $\frac{840}{9{\cdot}4}$ = 90 revolutions per minute.

124. Fluted Rollers. At this juncture of gill preparing and particularly that part which refers to the solution of drafting problems, it is perhaps advisable to remind the reader that the *drawing rollers* of each gill preparer are *corrugated*, and between these an endless apron of soft leather is passed. In all the previous calculations in gilling these rollers were treated as plain, but obviously the circumference of the *fluted rollers* will be greater than those of plain rollers.

When the depth of the flute and the cord of the arc of the circle are known, together with the number of flutes in the roller, the exact circumference of the roller circle can be ascertained, but for most practical purposes it will be found sufficient to mark one of the flutes with substance easily removed, say chalk, and then pass a piece of paper, cloth, tape or thin leather through the nip of the two rollers, when one revolution of the boss or bottom roller will give the exact lineal length or circumference.

If the back rollers are fluted as well as those of the front, the difference in the calculated result is small, and if it is also considered that the sliver passing between the nip of the back rollers is much thicker than the same sliver as it is being drawn through the front rollers, around which the 'leather' passes, the difference in calculated draft will also be found to be insignificant, since the extra thickness of the sliver at the back approximately neutralises the effect of the leather at the front. To accurately calculate the result it is necessary to know the thickness of the slivers at the back and front rollers, and also of the leathers as well as the fluting details. Then the mathematical solution is not very easy, so for practical purposes it is much better to follow the plan suggested.

CHAPTER XV.

DOUBLE OR TWO-SCREW GILL BOXES.

125. *Efforts to Reduce Breakages of Wool Fibres.* 126. *Double Threaded Screws.* 127. *The Expanding Screws.* 128. *Double Screw Gill Boxes—Calculation of Drafts.* 129. *Details of Double Screw Gill Boxes.* 130. *Drafting Examples.*

125. Efforts to Reduce Breakages of Wool Fibres.

In order to reduce, as much as possible, the breakage of the wool which must inevitably result from the relative action of the rollers and fallers, two or three modifications of the ordinary type of gill box have been introduced. Of these, the most notable is that by Clough of Keighley, where two independent sets of fallers, both travelling in the same direction, take the place of the ordinary single set. This contrivance enables an intermediate draft to be given to the wool, which dispenses with the necessity of having a *long* back draft. The back set, for example, is made to slightly lead the back rollers so that they are drawn gradually away. In all single gill preparers, however, there is a portion of the staple which is not affected at all by the fallers and back rollers, since when these are placed away from each other, the fallers do not materially straighten the fibres, after they have been released from the nip; thus practically only a portion of the staple is opened, while the remainder still retains its matted condition.

It is here where a considerable saving may be effected by having the first two boxes in the set made with the double screw arrangement, because by this plan the

breakages of the fibres are reduced to a minimum, and the quantity of short useless fibres to be removed in the subsequent process of combing is very much less. When the length is preserved it is much easier for every subsequent operation—the wool spins better, the thread is stronger, and less twist is needed since there are not so many short ends to be wrapped up. It should be noted that the adoption of this type of machine involves a considerable increase in speed in the front rollers, but the number of boxes which constitute a set may be reduced.

126. Double Threaded Screws. Sometimes gill boxes are provided with double threaded screws, with which the foregoing description must not be confused. In the double threaded screw gill box two fallers are consequently moved forward with every revolution of the screws, and two fallers are likewise depressed or raised by means of double cams, *i.e.* one faller for each half revolution of screw. The chief advantage of this method is an increased output; in every other respect the principle of the machine is the same.

127. The Expanding Screw. The third modification is entirely different from the preceding; in this case the drafting is almost wholly done by the fallers. Two types of this machine are used, in one case the box is made in two sections with only one pair of rollers, while in the other the ordinary arrangement of two pairs of rollers is retained. The faller screws have a graduated pitch, being finest at the back and coarsest at the front, so that as the fallers move away from the back rollers their speed is continually increasing with each revolution of the screw until they reach the end of their traverse. Of course, as the speed is accelerated, the distance between the fallers increases. This gives a distinct draft between every faller, so that an excessive front and back draft is obviated, and as the staples are opened throughout

their length, the fibres have been well separated and combed out when they reach the front rollers.

128. Double Screw Gill Boxes—Calculation of Drafts. A consideration of the method of calculating drafts in double screw gill boxes proves the most instructive system whereby a knowledge of the principles of those machines may be obtained, for when the various drafts can be calculated accurately the essential features of the mechanism must have been grasped. The chief function of gilling is to open out the close and matted staples, disarrange the natural order of the fibres, and rearrange them longitudinally.

In the single screw gill box, previously detailed, this work is performed by a number of fallers which travel in a horizontal plane from the nip of the back rollers towards the nip of the front rollers, and the draft is obtained from the relative surface velocities of the back rollers, the fallers and the front rollers. The fallers travel a little faster than the back rollers as the primary object is to cause the fibres to sink into the pins of the fallers. The front rollers revolve rapidly and thus draw the fibres through the pins of the fallers which results in their being somewhat straightened.

This operation is repeated until the fibres are sufficiently prepared to be passed forward to the combing machine, but as several wools, such as Alpaca, Mohair and English lustres—particularly the first—contain many close staples which have to be opened out, it is found advantageous to use a double screw gill box, and experience teaches that as much draft is required for this purpose as is compatible with the length of the raw material, which draft cannot be obtained with a single screw gill box. No doubt the carding operation is a preferable process for separating these close staples since the points of the carding teeth meet each other and consequently make it almost impossible for any of the fibres to pass without being disengaged from each other, but

this operation destroys the lustre to a very much greater extent than gilling.

There are three distinct drafts in the double screw gill box, which make up the total amount of draft in the entire box and these are :—(1) The draft between the back rollers and back fallers; (2) The draft between the back and front fallers; (3) The draft between the front fallers and front rollers. In order to understand the principle of calculating the drafts in these machines it will be necessary to refer to the accompanying diagrams, Figs. 52, 53, 54 and 55.

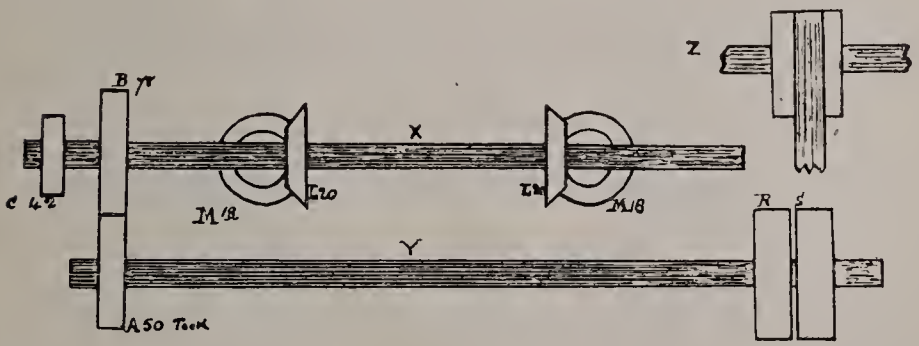

Fig. 51.

129. Details of Double Screw Gill Boxes. Fig. 51 is a front elevation of the pulley shaft Y and the front driving shaft X of the machine. The belt from the mill shaft Z is also indicated, it passes round the loose pulley S when the machine is not in motion, being transferred to the fast pulley R when motion is imparted. The wheel A on the pulley shaft drives the spur wheel B which is fixed on the front driving shaft X.

Fig. 52 is a plan view of shaft X and all the mechanism which regulates the draft. It also shows the front roller shaft W; the back shaft V; the back roller shaft U: the screws P, P^1, P^2 and P^3; the front roller N and

the back roller O, together with all the gearing for giving motion to these respective parts.

Fig. 53 is a side elevation of the gearing details from the *front driving* shaft X to the *front roller* shaft W and the *back driving* shaft V.

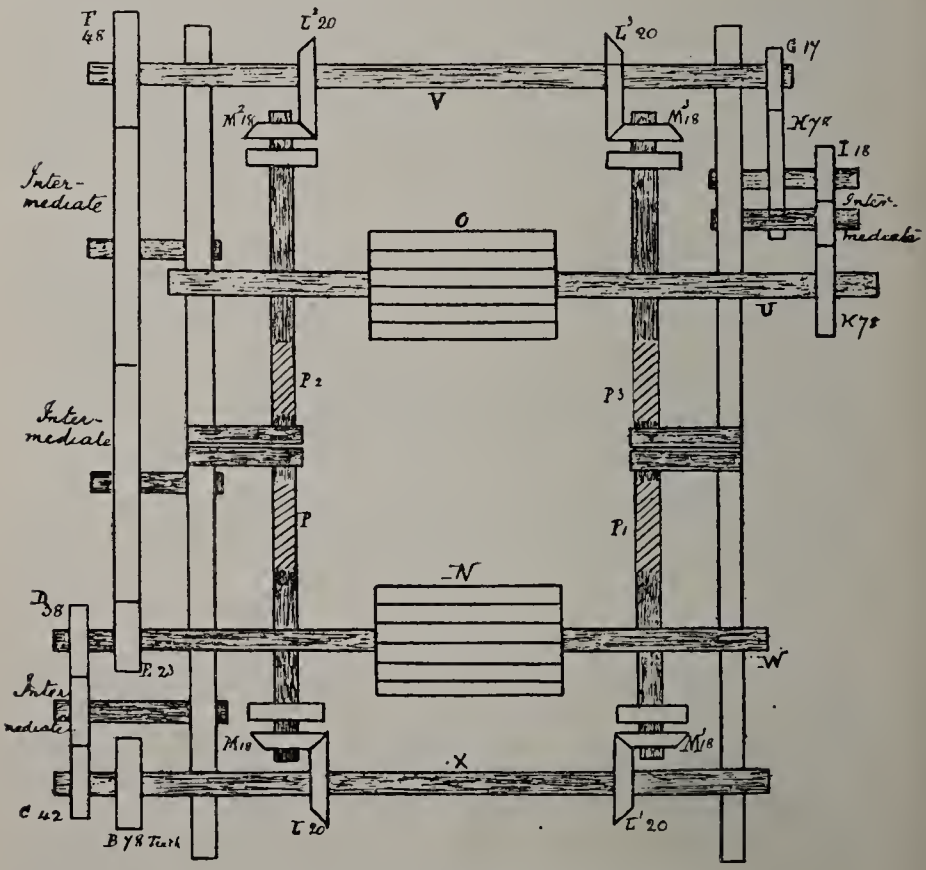

Fig. 52.
Plan view of double screw gill box.

Fig. 54 is a side elevation of the gearing details from the *back driving* shaft V to the *back roller* shaft U.

The spur wheel G is fixed on the opposite end of the back shaft to that of the spur wheel F. The same letters in each diagram refer to similar parts of the machine.

The wool as in the single screw gill box is fed by hand on an endless leather apron which revolves towards

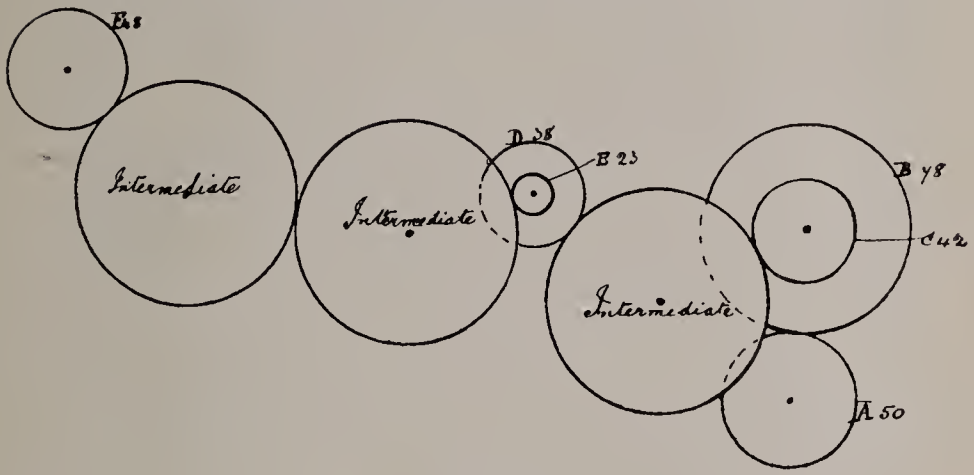

Fig. 53.
Side view of gearing to front rollers and back shaft.

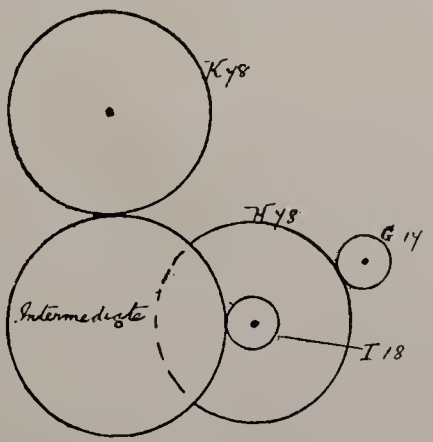

Fig. 54.
Side view of gearing from back shaft to back roller.

the nip of the back rollers and as it emerges from these rollers it is pierced by the fallers which successively rise from the bottom screws. These fallers travel forward in the back screws P^3 and P^4 at a little quicker rate than

the wool is delivered by the back rollers, and in a similar manner the front fallers which lie in the front screws P and P^1 take charge of the wool and as they travel a little faster they also draft out the wool which is then received by the nip of the front rollers N. These rollers, revolving rapidly, thus draw the wool through the pins of the front fallers and deliver it over the front driving shaft (which has a machine guard on it), to an endless leather sheeting from which it is taken off in lap form and put up behind the second and third boxes, successively, the remaining boxes being single screws.

130. Drafting Examples. The wheels which communicate motion to the different parts of the machine including their size and other dimensions which regulate the drafts in the first three boxes preparing Alpaca are as follows:

	1st Box	2nd Box	3rd Box
	Teeth	Teeth	Teeth
Spur wheel A on pulley shaft	50	50	50
,, ,, B on front driving shaft ...	78	78	78
,, ,, C on front driving shaft (driver)	35	42	42
,, ,, D on front roller shaft (driven)	28	38	40
,, ,, E on front roller shaft (driver)	27	23	31
,, ,, F on back roller shaft (driven)	65	48	26
Change Spur wheel G on back roller shaft (driver)	16	17	17
Spur wheel) H on double stud (driven) ...	78	78	78
,, ,, I on double stud (driver) ...	16	18	20
,, ,, K on back roller shaft (driven)	78	78	78
Bevel ,, L driving screws	20	20	20
,, ,, M on screw ends	18	18	18
	In.	In.	In.
Diameter of back and front rollers ...	$3\frac{1}{2}$	$3\frac{1}{4}$	$3\frac{1}{2}$
Pitch of screw	$1\frac{1}{8}$	1	*

*Back screw $\frac{7}{8}$ of an inch; front screw $1\frac{3}{4}$ inches, double threaded screw, therefore 2 fallers descend for 1 revolution of screw, *i.e.* 1 faller for every half revolution.

Speed of mill shaft 130 revolutions per minute; diameter of drum on mill shaft 16 inches; diameter of pulleys on pulley shaft of gill box 14 inches.

To calculate the respective drafts, it will only be necessary to consider those wheels which affect each draft separately and we will take for an example the draft between the back rollers and back fallers. The various pieces of mechanism which affect the draft in this portion of the machine are (1) The bevel wheels L^2 and L^3, on the back shaft and M^2 and M^3, on the ends of the back screws P^2 and P^3; (2) the pitch of these screws; (3) the circumference of the back rollers; and (4) the train of wheels G H I K.

The simplest method of solving this and like problems is to arrange the calculation in the form of a fraction, placing in the numerator all those wheels together with the pitch of the screws and circumference of the back rollers, which if increased would produce more draft, and in the denominator those which if increased would produce less draft. Let it be assumed that the number of teeth in the bevel wheels L^2 and L^3, on the back shaft are increased, then being driving wheels to the back screws they will cause the latter to travel faster while the speed of the back rollers remains the same. Consequently, the velocity ratio of the fallers, travelling in these screws as compared with the surface velocity of the back rollers will be greater and, therefore, the sliver in this part of the machine will receive a greater attenuation or drawing which is technically termed draft.

Further if the number of teeth in the bevel wheels M^2 and M^3 on the ends of the back screws be increased the screws will travel slower as they are *driven* wheels, while the speed of the back rollers remains the same and consequently there will be less draft between the back rollers and back fallers. In a similar manner it will be readily seen that if the speed of either of the driving wheels G or I be increased, it will cause the back

rollers to travel faster so that the velocity ratio of these rollers and the back fallers will be reduced and the draft will be proportionately less.

Again, if the number of teeth in the driven spur wheels H and K be increased, the speed of the back rollers will be proportionately decreased, but more draft will be the result and lastly if the circumference of the back rollers be increased more sliver will be delivered for one revolution, and consequently there will be less draft; while if the pitch of the screws be increased it will cause the fallers to travel away from the nip of the back rollers with increased velocity and thus give more draft.

The arrangement of each calculation, based upon the above reasoning would be as follows: —

FIRST BOX.

1. Draft between the back rollers and back fallers:

$$\frac{\text{More draft } L^2 \text{ or } L^3 \times H \times K \times \text{Pitch of screws } P^2 \text{ or } P^3}{\text{Less draft } M^2 \text{ or } M^3 \times G \times I \times \text{Circumference of back roller O.}}$$

or expressed in figures it would stand thus:—

$$\frac{\text{More draft } 20 \times 78 \times 78 \times 1\frac{1}{3}}{\text{Less draft } 18 \times 16 \times 16 \times 3\frac{1}{7} \times 3\frac{1}{2}} = 2 \cdot 7$$

2. Draft between the fallers:—

$$\frac{\text{More } L \text{ or } L^1 \times D \times F \times M^2 \times \text{Pitch of screws P or } P^1}{\text{Less } M \text{ or } M^1 \times C \times E \times L^2 \times \text{Pitch of screws } P^2 \text{ or } P^3}$$

or in figures thus:—

$$\frac{\text{More } 20 \times 28 \times 65 \times 18 \times 1\frac{1}{8}}{\text{Less } 18 \times 35 \times 27 \times 20 \times 1\frac{1}{8}} = 1 \cdot 9$$

3. Draft between front fallers and front rollers:—

$$\frac{\text{More M or } M^1 \times C \times \text{Circumference of front rollers N}}{\text{Less } L \text{ or } L^1 \times D \times \text{Pitch of front screws P or } P^1}$$

or in figures thus:—

$$\frac{\text{More } 18 \times 35 \times 22 \times 3\frac{1}{2}}{\text{Less } 20 \times 28 \times 7 \times 1\frac{1}{8}} = 11$$

4. Draft in the entire box :—

$$\text{More } \frac{F \times H \times K \times \text{Diameter or circumference of front roller N}}{\text{Less } E \times G \times I \times \text{Diameter or circumference of back roller O}}$$

or in figures thus :—

$$\text{More } \frac{65 \times 78 \times 78 \times 3\frac{1}{2}}{\text{Less } 27 \times 16 \times 16 \times 3} = 57 \cdot 2$$

SECOND BOX.

1. Draft between back rollers and back fallers :—

$$\text{More } \frac{20 \times 78 \times 78 \times 2 \times 7}{\text{Less } 18 \times 17 \times 18 \times 7 \times 22} = 2$$

2. Draft between the fallers :—

$$\text{More } \frac{20 \times 38 \times 48 \times 18}{\text{Less } 18 \times 42 \times 23 \times 20} = 1 \cdot 8882$$

3. Draft between front fallers and front rollers :—

$$\text{More } \frac{42 \times 18 \times 7 \times 22}{\text{Less } 38 \times 20 \times 2 \times 7} = 10 \cdot 9$$

4. Draft in the entire box :—

$$\text{More } \frac{48 \times 78 \times 78}{\text{Less } 23 \times 17 \times 18} = 41$$

THIRD BOX.

1. Draft between back rollers and back fallers :—

$$\text{More } \frac{20 \times 78 \times 78 \times 7}{\text{Less } 18 \times 17 \times 20 \times 3\frac{1}{2} \times 3 \times 8} = 1 \cdot 58$$

2. Draft between fallers :—

$$\text{More } \frac{20 \times 40 \times 26 \times 18 \times 7}{\text{Less } 18 \times 42 \times 31 \times 20 \times \frac{7}{8} \times 4} = 1 \cdot 59$$

3. Draft between front fallers and front rollers :—

$$\text{More } \frac{18 \times 3\frac{1}{2} \times 22 \times 42}{\text{Less } 20 \times 1\frac{3}{4} \times 7 \times 40} = 5 \cdot 94$$

4. Draft in entire box :—

$$\text{More } \frac{26 \times 78 \times 78}{\text{Less } 31 \times 17 \times 20} = 15$$

From the foregoing it will be observed that the amount of the entire draft in both first and second boxes is considerable, but when it is remembered that some of the wools which have to be prepared in these machines contain many close and short staples which cannot be opened out satisfactorily except by drawing them as rapidly as convenient through the pins of the fallers by the front rollers, the draft is not too much as experience has proved.

CHAPTER XVI.

OILING WOOL.

131. *Object of Oiling Wool.* 132. *Suitable Oils—Gallipoli.* 133. *Oeline Oil.* 134. *Oil Emulsions.* 135. *Wool Lubricant Mechanisms.* 136. *Oiling Carded Wools.* 137. *Proposed Standard Allowance of Oil.* 138. *Dry Spun Yarns.*

131. Object of Oiling Wool.

WHETHER it is necessary or desirable to apply oil to wool is a question upon which a great variety of opinions is held. The *spinner* says it decreases the amount of waste and facilitates spinning to higher counts; the *dyer* says it is often a source of much trouble and annoyance to him as he has invariably to remove the grease before he can obtain satisfactory shades.

When the wool has been thoroughly degreased by alkaline scouring, the serrations of the fibres project somewhat from the hair shaft. These serrations catch and retard each other s progress and are liable to injury. Again, the fibres in each of the preparatory processes, manifest a strong tendency to 'fly' or electrify and thereby produce an excess of waste during manipulation into sliver, top, roving and yarn which reduces the spinning properties and yarn value.

In order to avoid this and consequently to allow the scales of the wool fibres to freely pass each other, the wool is oiled, which operation imparts softness, pliability, elasticity and adhesiveness to the fibres, so that in the subsequent machines it is possible to give the maximum draft with the minimum amount of waste.

Even a cursory consideration of the earlier processes through which wool passes, and the conditions to which it is subject, will serve to indicate why it must be oiled. An erroneous method always requires an alternative to repair the damages which have been wrought. Under proper circumstances—that is, when the wool has been properly cleansed—the use of oil is not only unnecessary, but objectionable. The application of oil is almost absolutely necessary in order to neutralise the injury done to the fibre as a result of the present system of alkaline scouring. The lubrication of wool will continue to be necessary until the more scientific method, previously referred to, of cleansing wool by the naphtha process is adopted, which unfortunately requires such a costly plant, that only mills using large quantities of wool can utilise it, but this difficulty can apparently only be solved by the installation of a central station for naphtha cleansing on a large scale and under capable management and supervision, in which case there is small doubt but the experiment would prove successful and economical.

Solvay's ammonia soda process is considered by some scientists to be the process of the future wool scouring. It is scientifically correct, while the difficulties to be overcome are chiefly mechanical. Meanwhile artificial means must be adopted to substitute the natural lubricants removed in the alkaline scouring bath.

Here, then, is the reason why oil is applied to wool to lubricate the fibres so as to enable them to readily slide over each other as well as to form a compact end. First the wool was treated with alkalies to remove the grease, and now oil must be used to overcome the effects of the alkalies. These considerations will serve to show the necessity of exercising care and forethought with regard to the use of scouring agents.

132. Suitable Oils—Gallipoli Having seen the purpose for which the oil is applied and the work which it has to accomplish, some idea of the kind required can now be formed. Its principal use consists in neutralising the alkali which has been deposited in every portion of the structure, consequently the oil employed must be one possessing equal powers of penetration, that is, the most fluid oil is to a certain extent the best, since the fine scales of the wool admit more readily of its entrance; in addition to this, the oil must readily combine with carbonate of soda or potash, producing a kind of soap which, of course, serves to keep the wool soft and increases the suppleness of the fibres. Whatever may be the class of oil used, it must be a stable compound unaffected by exposure to the atmosphere, with no tendency to turn rancid. This is a fatal objection, because when it occurs the wool becomes sticky and wiry, which prevents its being readily drafted and drawn out. It is also very objectionable in the material whenever it has to be subsequently stocked in the grease as yarn or cloth. Its standard of purity must also be reliable, since any variation in its composition or the presence of impurities will sooner or later injure the fibre. These requirements seem to be fulfilled in a great measure by *olive or Gallipoli* oil; certainly it is the most suitable of any at present in the market.

The following table of specific gravities of oil indicates to a certain extent its adaptability for lubricating purposes.

Kind of Oil	S.G.
Poppy Seed	·939
Linseed ,, ...	·932
Rape ,, ...	·931
Beech ,, ...	·923
Olive	·913
Oeline	·910

The specific gravity of a substance is the ratio which the weight of a certain volume of the substance bears to the weight of an equal volume of water, of which one cubic foot at a temperature of 60° F., weighs 1000 ounces.

133. Oeline Oil. Oeline Oil, in its purest state is the next best lubricant to olive oil. It is extracted from oelic acid, which is a by-product in the manufacture of stearine candles. In the process of extracting stearine from the oelic acid, sulphuric acid is employed which is consequently left in combination with the oelic acid. The sulphuric acid is extracted by distillation from the oelic acid, because if any were left in the oil residue, it would act injuriously on the wool fibres. Both olive and oeline are possessed of high saponification, which renders them easier of removal when required, as is the case, when the top, yarn or cloth has to be scoured or dyed. They are also classed as non-evaporating oils which characteristic suggests that they retain a constant fluidity—an important desideratum in all wool lubricants.

134. Oil Emulsions. Further, emulsions of both these oils can be easily made and they are often so used in the worsted trade. The usual method consists in adding clean and soft or distilled water and ammonia until an emulsion of the compound manifests itself. Careful observation and judgment are necessary when the ammonia is being added, since an excess makes the emulsion too thick whilst a deficiency fails to hold the various ingredients in combination.

Emulsions obtained from good oils, as the foregoing, are less sticky than the pure oil and therefore contribute to easy working, whilst the volatile agent has time to evaporate during the various subsequent processes, prior to the dyeing of the yarn or fabric. Emulsions, creams and compounds of all other classes should be viewed with

suspicion and especially when cheapness is their only recommendation, because very frequently they are made up without any cognisance being taken of the duties to be performed or the influence which the substances they contain have upon the wool. Too frequently they contain appreciable quantities of acids which, although they neutralise the retained alkalies by combining with them, very often cause the formation of compounds which may be of a crystalline character and serve to increase the rigidity of the fibre. In many cases water enters very largely into the composition of these compounds, so that their cheapness is somewhat explained.

135. Wool Lubricant Mechanisms.

Having considered the causes which necessitate the use of oils and the kind to be employed, their application must next be considered. And here the first condition to be fulfilled is a complete distribution throughout the length of the fibre. Various methods are in use for securing this. That most commonly adopted consists in fixing a receptacle and *trough* containing a *revolving cylinder* over the fallers at the fourth or fifth boxes. The oil flows into the trough from the receptacle, so the same level is always maintained. A number of tin *scrapers*—which can be varied according to requirements—is placed against the face of the cylinder; these scrape off the oil, which drops from them on to the wool in the fallers. Sometimes they are replaced by a circular revolving brush, thus creating a very fine spray. Both these methods are faulty, from the fact that the oil falls on to the wool in drops, consequently some parts of the fibres are saturated, while other portions are left without any. True, the porosity of the cells permits and facilitates its permeation to other parts, but the tenacity with which they hold it prevents its equal distribution.

The *revolving brush type* of mechanism for distributing the oil is illustrated at Fig. 56 which is a sectional eleva-

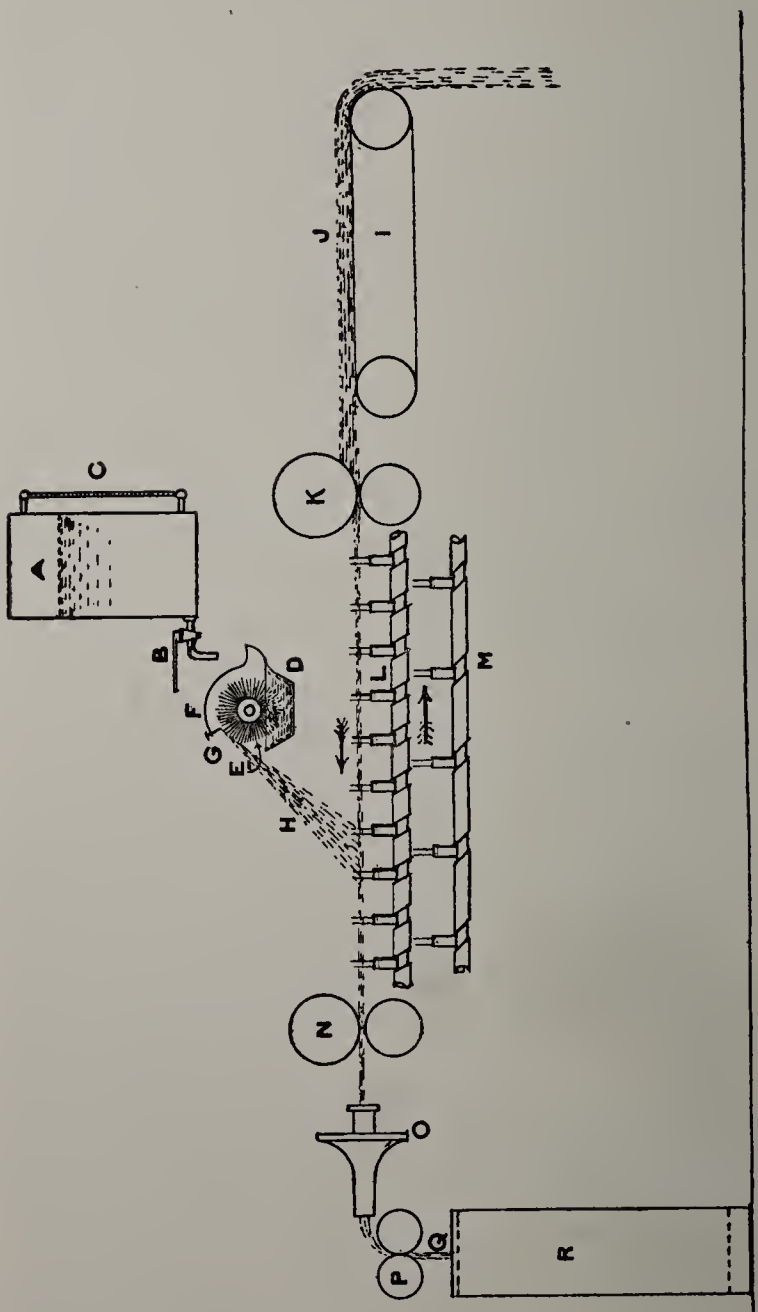

Fig. 56.
Oiling Wool in the Preparing Gill Box.

tion of the 4th or can gill box and oiling mechanism. This is the most suitable box to first apply the oil, since in the three previous or lap machines a considerable quantity of dust is driven out of the sliver, which if mixed with the oil would form a paste and retard its lubricating properties. The oil is stored in the chamber or tank marked A; B is a stop tap; attached to the tank is a scale or gauge glass C which is graduated so that any definite quantity of oil can be accurately measured off to suit the amount and character of the wool. The oil is run as required into a trough marked D; a brush E is supported and free to revolve in the oil contained in trough D and is directly connected by toothed gearing to the roller shaft and also partially enclosed by means of the cover F; G is a blade which is kept in contact with the bristles of the brush E; H indicates the spray of oil falling on to the sliver as it passes through the fallers. The prepared sliver from the 3rd gill box is fed on to the revolving apron I as shown at J; the back rollers are shown at K, the top fallers at L, the bottom fallers at M, the drawing rollers at N, the trumpet funnel at O, the delivery rollers at P, the finished sliver at Q and the sliver can at R.

The process of distributing the oil is simple. When the machine is in motion the brush E rotates in sympathy and the knife or blade G constantly resisting the forward traverse of the bristles of the brush causes the spray of oil H. The greater the pressure of the blade, the greater the quantity of oil distributed.

Another effective arrangement is to run the sliver after it leaves the front rollers over a roller running in a trough of oil. Here the whole length of the fibre is brought into contact with the oiled surface as it passes over it, and the absorption is, as a result, much more regular. The quantity of oil put on the wool may be easily regulated by the height at which it is kept in the trough and the speed of the roller. Thus, if only a very

small quantity is required, the roller may be run very slowly; but still there is a regular and constant supply being placed on the wool. In the scraper arrangement, however, when the amount has to be decreased some of the conductors have to be taken off the roller, and hence a large number of the fibres never get oiled except by the repeated doublings of sliver. Where the table drier is in use the oil is frequently put on to the dry wool as it rests upon the drier. The means employed consists of an ordinary watering can with a "rose" spout. For each pack of greasy wool, washed, spread and dried on the table a definite quantity of oil is measured into the can and distributed as equally as possible by such means. With other systems of drying and for long wools the lubrication frequently occurs at the preparing boxes by an oiling motion as described previously.

136. Oiling Carded Wools. In worsted carding for Botany wools the lubricant should be added before carding, *i.e.*, at the Willey machine. It is best to first Willey without oil to remove most of the dust left in the wool after drying, and then to again pass the material through the same machine in conjunction with any of the foregoing oiling mechanisms. When the wool is intended for fabrics which have to be dyed to delicate shades, some manufacturers work it up without oiling, as it is then in a better condition to receive the dyestuffs. This process is technically termed "Dry Combed."

In fine wools which are first carded, and occasionally in prepared wools which have to be subsequently 'back-washed,' very little or no oil is mixed with the fibres before carding or preparing. But immediately after the back-washing process, the requisite quantity of oil is automatically distributed among the wool fibres by one or other of the methods already described. If the tops are intended to be drawn and spun 'new combed,' it is

sometimes advisable to put on a little extra oil as the wool passes through the gill box in the drawing operation.

When the combed tops have to be stocked for some time the lubricating should be sparingly done and in the preparing or willeying operations, otherwise the tops become ' sad ' and work up greasy; any deficiency of oil can be easily rectified in the drawing process, where additions can be made whilst none can be taken out.

137. Proposed Standard Allowance of Oil. The amount of oil proposed as a trade standard by a special committee of the Bradford Chamber of Commerce is $3\frac{1}{2}\%$ by the ether test—$\frac{1}{2}\%$ for the natural grease left in the wool and 3% for added, and for dry combed tops ·634% of gross fatty matters. To these figures the top makers dissent; meanwhile the subject is in abeyance, but the percentages given will serve as a basis for further research and discussion on this highly technical problem.

138. Dry Spun Yarns. When yarns have to be spun " dry " or combed without oil for the Bradford dress goods trade, the tops must be prepared with the utmost care and in the most perfect order; they should afterwards be stored for at least two or three weeks, longer by preference, so as to allow the wool a sufficient length of time to absorb moisture to the maximum standard *condition*.

The harder the fibre, the longer should the period of storage extend; the longer this extension the better will be the condition of the top for the subsequent operations of drawing and spinning. Of course increased length of storage involves increased cost of production, but special results always involve special expenditure.

The French or porcupine system of drawing and spinning is admirably adapted to secure the greatest success in the production of dry spun yarns. Further,

the method of artificially humidifying the air so as to produce the most perfect atmospheric conditions as adopted in flax spinning, will contribute towards success in this direction.

Part IV.

WORSTED CARDING OR SHORT WOOL PREPARING.

CHAPTER XVII.

OPENING PROCESSES AND REMOVAL OF LOOSE AND VEGETABLE IMPURITIES.

139. *Object of Carding for Worsted.* 139*a*. *Cots and their Removal.* 140. *The Double Swift Willey.* 141. *Process of Opening.* 142. *Burrs and Burring.* 143. *The Burring Machine.* 144. *Operation of Burring.* 145. *Burring Accessories to Carding Machine.* 146. *Carbonising or Extracting.* 147. *Twaddle Degrees.* 148. *Carbonising Process.*

139. Object of Carding for Worsted. WHILST the process of preparing is pre-eminently suited for the opening and separation of long wools and the longer classes of the crossbred varieties, yet when the merino or, as they are more commonly termed, Botany wools and the shorter crossbreds have to be dealt with, recourse has to be had to the process of carding. There are, however, one or two preliminary operations through which the wool has very often to go before it can be placed on the carder. Included among these are the opening of ' cots ' and matted wool and the removal of

loose impurities and of burrs. Certain classes of wool may be passed direct from the drying operation to the worsted card.

139a. Cots and their Removal. When long wool for preparing is very matted or full of cots, it is usual to first run it through a *strong preparing gill box* and so to open these, preparatory to the usual process of preparing. When short and medium wools for carding are also matted they are sometimes similarly treated in a strong preparing gill box, which increases the cost of production for both classes of yarns, one man being only able to attend to one box.

The ordinary Willey machine with the improved feed and delivery brattice as used in the woollen trade to loosen the wool, and set free the impurities, is scarcely suitable for this purpose since one of the cardinal factors in the worsted trade is to avoid any breakage of fibres at all costs, a characteristic which this machine cannot claim to possess.

A machine of simple construction has, however, been introduced and is used by some firms as an opening process to carding. It treats the wool less severely than the Willey or woollen teaser.

140. The Double Swift Willey. The Double Swift Willey made by Taylor and Wordsworth, of Leeds, is frequently used in the worsted trade for the purpose under discussion. It is very simple in construction; a line diagram of the essential parts obtained from the machine is shown in sectional elevation at Fig. 57. A and B represent the two opening rollers which are studded with double rows of very strong, tapered steel pins. They are free to rotate in the direction indicated, and make about 400 revolutions per minute. A pulley S secured to Swift A connects and communicates by a belt Q, rotary motion to a pulley C compounded with a spur pinion D, both of which are

free to revolve on the same central stud; the pinion D gears into and communicates motion to a large spur wheel E secured to the end of the fluted feed roller F, which is compounded with, and drives the adjoining bottom fluted feed roller G. The top rollers are rotated by frictional contact with the bottom rollers F and G. Two levers H and I of the second order, are separately free to oscillate about the fixed stud J; attached to these levers are two short arms K and L, which rest upon the journals of the top feed rollers; adjustable weights M and N, acting through the levers H and I and the arms K and L, apply the requisite amount of pressure to these rollers. The product of the weight applied to each feed roller=

$$\frac{\text{Weight of M} \times \text{Distance M J}}{\text{Distance K J}} \quad \text{or} \quad \frac{\text{N} \times \text{Distance N J}}{\text{Distance L J}}$$

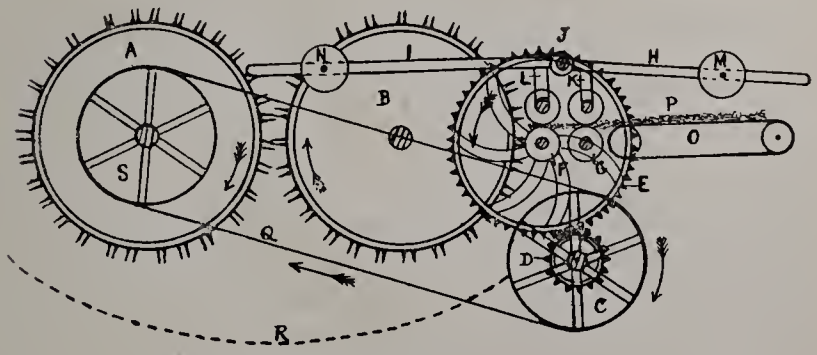

Fig. 57.

141. Process of Opening. The matted wool is fed on the feed sheet O and conveyed to the feed rollers F and G. Immediately it appears on the opposite side of the roller F it is seized by the teeth of the opening cylinder B, partially opened and carried forward to be more completely separated with the aid of the teeth in cylinder A. This cylinder then carries the material out of the machine into a skep or other convenient receptacle. A fan placed and revolving underneath the feed rollers produces a current

of air which assists the wool forward, whilst a downward draught forces the loose impurities through the grate R.

With English skin wools which are full of lime and dust, the Willey machine is frequently used to loosen the fibres and remove as much dust as possible, preparatory to washing, but great care must be exercised to avoid any excessive breakage of the wool fibres. If these points be attended to, the wool is not only better prepared for the washing process but is also in a better condition for the preparing processes which have to follow. The modern worsted carding machines are however, designed to thoroughly open and remove an average quantity of loose and vegetable impurities and to card and prepare in a continuous sliver, the wool ready for the important operation of combing which follows.

142. Burrs and Burring. Many of the fine Botany wools, more especially the Port Philip, Cape and Buenos Ayres, contain large quantities of prickly seeds or spiny fruits, which become so closely entangled with the fibres as to be very difficult to remove. These thorny and troublesome fruit stems are technically called "burrs." They become attached to the fleece while on the sheep's back during the period of feeding, and retain a tenacious grip of the wool fibres until they are forcibly removed or destroyed. To leave them attached to the wool fibres is injurious to the subsequent spinning and weaving operations, since they frequently cause the threads to break down and if allowed to reach the finished cloth they deteriorate its value, and frequently have to be extracted by hand, which is an expensive method.

In these days, when yarns are guaranteed to be free from burrs, their complete removal during the making of the yarn is of primary importance. For this purpose two methods are available—viz., the mechanical, as seen in the burring machine; or the chemical, as in the process of extracting, where the vegetable impurities are

carbonised by means of sulphuric acid or hydrochloric acid gas.

Much diversity of opinion exists as to the relative merits of these two methods, both with reference to effectiveness and the injury done to the wool. Of course, the mode of treatment in the first instance depends upon what has to be accomplished. Where the wool is "shivey"—*i.e.*, when the vegetable impurities are very small—extracting is undoubtedly the better way of dealing with them; but when merely burrs are present, the burring machine will commend itself to most wool users.

143. The Burring Machine. There are several types of machines in general use, but most of them agree in the principle of treatment, though they differ somewhat in constructional details.

An illustration in sectional elevation of the essential features of a "Sykes" burring machine is supplied at Fig. 58. A is the lattice on which the wool is fed; C is the feed rollers; D is a rotating roller or beater, which opens out the wool and throws it on the travelling brattice F; G is a large brush, free to rotate in the direction shown; H is a large comb cylinder, the whole periphery of which is covered with steel comb plates, each about $1\frac{1}{2}$ inches in width. Radiating from the comb segment is a large number of needle pointed teeth, but the wires do not radiate from the centre but incline somewhat concentrically with the cylinder so that their individual points are projecting in the direction of the traverse of the cylinder; I is an adjustable steel blade with a bevelled edge, which is placed across the front of the comb cylinder H; J is a rotating beater set close to the edge of knife I; K is a second beater, free to rotate as shown; L is a plate prepared to hold any particles of wool or burrs which may have been knocked out by the beater J; M is a segment brush, having its bristles set into the teeth of the cylinder H and free to

revolve as shown; N is the box into which the treated wool is thrown; O is a small stripping roller working between the cylinders G and the brush P; Q is a beater, free to rotate in contact with the brush P.

144. Operation of Burring. The process is as follows:—The wool B to be treated, is fed on to the feed brattice A and the rollers C. These carry it forward to the beater D which partially opens the wool and throws it on to the brattice F, from which the brush G takes it up assisted by the small roller near its base as shown. The comb cylinder H rotating faster than the brush constantly takes from the latter a very thin layer of wool and carries it round towards the bevel edge of knife I, which is adjusted to suit the class of wool under treatment, so that any burrs or solid bodies projecting from the wool are arrested by the knife edge. Simultaneously the beater J rotating close to the blade knocks off any such burrs on to the tray L, from which position they are speedily driven into a suitable chamber by the beater K. The wool, thus stripped of burrs, etc., continues its journey until it comes in contact with the brush M which, revolving at a greater speed than the comb cylinder, immediately clears the latter of all the cleaned wool and throws it into a receptacle placed at N, as indicated by the arrow. Should any particles of wool cling to the brush G after the latter has passed the comb cylinder H, they are taken up by the small stripper roller O and passed on to the brush P from which they are knocked by the beater Q on to the brattice F to be again treated.

The essential work, it will be observed, is done between the cylinder H, the blade I and the beater J.

145. Burring Accessories to Carding Machine. (a) BURRING ROLLERS are adjuncts to the carding machine, for the mechanical removal of burrs from wools which are not excessively overcrowded with these vegetable impurities; the chief objection to their

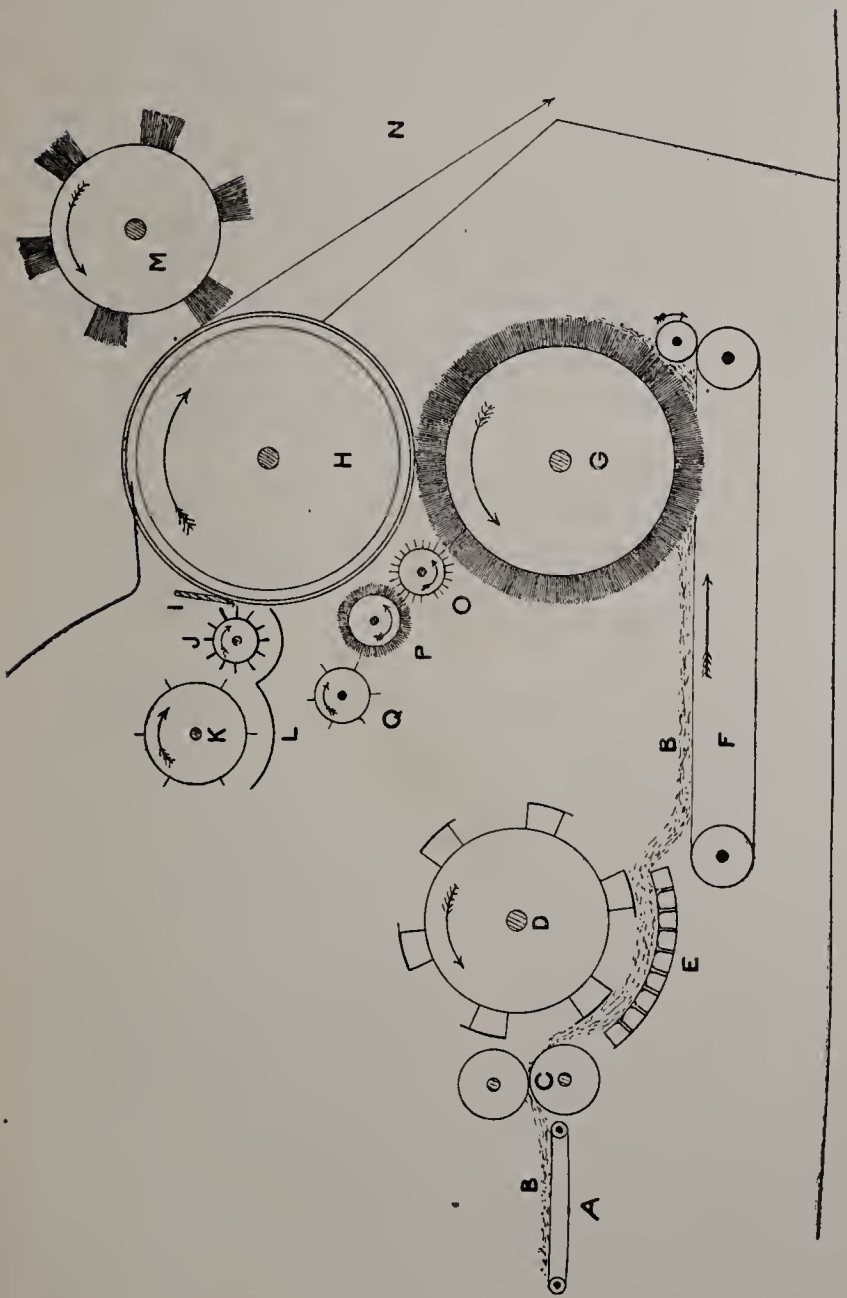

Fig. 58.
Sectional Details of Wool Burring Machine.

use is that they also carry off a quantity of wool in the process, to reclaim which the material must be subsequently carbonised.

(b) Burr Crushing Rollers are also combined with the carding operation, or they may be used as a separate machine after carbonising. They consist of heavy rollers placed between the first doffer and second carding cylinder, or they may be arranged to immediately follow the last doffer of the worsted card; their function is to crush the burrs to powder as the very thin film of carded wool passes between them, they are therefore carefully adjusted so as to crush the burrs without damaging the fibres; the burrs are usually thicker than the film of fibres.

When used as a separate machine after carbonising, it consists of four pairs of rollers which revolve at increasing speeds from feed to delivery end, the object of which is to attenuate the wool into a thin sheet preparatory to its passage through the crushing rollers which immediately follow.

146. Carbonising or Extracting. The washed wool, before carding, is chemically treated so that the employed re-agent combines with some of the hydrogen and oxygen, constituting part of the vegetable burrs, in such a manner that when subjected to excessive heat, these two elements are driven off leaving the residue in a black cindery (carbon) state.

147. Twaddle Degrees. Perhaps before describing more fully the method of carbonising it will be well to first describe the term *Twaddle*, which is a method of representing the specific gravity of any liquid in a more convenient form of expression, especially in those examples where the S.G. of the solution would require to be expressed to the second or third decimal place. The formula with examples of conversion of S.G. into terms Twaddle and *vice versa* are given below.

1. To convert degrees Twaddle into specific gravity :—

$$\frac{(\text{Degrees Twaddle} \times 5) + 1000}{1000} = \text{specific gravity.}$$

and conversely,

2. To convert specific gravity into degrees Twaddle :—

$$\frac{(\text{Specific gravity} \times 1000) - 1000}{5} = \text{degrees Twaddle.}$$

Example 1. Convert 60 degrees Twaddle into specific gravity.

$$\frac{(60 \times 5) + 1000}{1000} = \frac{1300}{1000} = 1{\cdot}3 \text{ specific gravity.}$$

Example 2. Convert 2·2 specific gravity into degrees Twaddle.

$$\frac{(2{\cdot}2 \times 1000) - 1000}{5} = \frac{1200}{5} = 240 \text{ degrees Twaddle.}$$

148. Carbonising Process. In carbonising, the method most generally adopted is to steep the wool for about one hour in a 5 to 6% solution of sulphuric acid of about 8° to 10° *Twaddle*, and after thorough saturation it is allowed to drain, and is then transferred to the drying-room, where it is submitted to a temperature sufficient to drive off the moisture and thus concentrate the acid. Now concentrated sulphuric acid has a great avidity for moisture, it being often placed in the cases containing scientific instruments, to protect them from the damp in the atmosphere. This will enable us to understand somewhat its action on the vegetable matter. It first extracts the constitutional moisture and begins a process of reduction which destroys the characteristic features and causes the burrs to become crisp, brittle and black, the residue being composed principally of carbon and mineral substances. These may be readily removed either by a shaking machine or, what is much better, by passing through a

bowl of water made slightly alkaline, to neutralise the acid which is left. The alkali in the water combines with the acid and forms a neutral salt, which thus removes any further risk of injury to the wool fibres.

Other re-agents are also used for the purpose of carbonising but $H_2 SO_4$ is the chief, the strength of which varies to suit the material required to be treated. Acid steeping baths and machines with the tanks made of wood, are now designed and used on the same principle as wool-washing machines.

If the wool has been passed through a Willey machine either before or after washing it further ensures the distribution of the acid solution to all parts of the material under treatment.

An alternative method of chemical cteatment consists in placing the wool in a large cylinder into which freshly decomposed hydrochloric acid is conducted. The result is that the burrs are " carbonised." *Apropos* of this question, the influence which this mode of treatment has upon the wool ought to be considered. At the outset it must be admitted that before the evidence can be recognised, the experiments must be conducted under conditions similar to those which obtain commercially. Strong concentrated alkaline solutions act very readily on wool and completely dissolve it, but a very weak and cold solution has little or no influence on the fibre. Similarly, very strong acids are capable of disintegrating and decomposing the cells, while very weak solutions in the presence of vegetable matter, so far as experiments show, produce no difference either in appearance or strength.

CHAPTER XVIII.

OBJECT AND PROCESS OF WORSTED CARDING.

149. *General purpose of Worsted Carding.* 150. *The Worsted Card—General Details.* 151. *Automatic Feeding.* 152. *Sizes of the various Rollers.* 153. *Driving the Card Rollers.* 154. *Formula for Calculating Speeds of Card Rollers.* 155. *Principle of Carding.*

149. General purpose of Worsted Carding.

THE object of carding is to separate the wool staples or other textile fibres one from another, thus securing what is termed a combing or straightening of the fibres, and an arrangement of them to form one continuous film or sliver, all parts of which are equal in thickness and weight, and contain every variety of length of fibre equally distributed. If the sliver is composed of various qualities produced by blending, it is essential to have the various sorts arranged or mixed in relative proportions throughout the entire sliver.

The mechanical arrangement of the wool fibres by the process of carding for worsted is not intended to be permanent; its function is to secure a complete separation of the individual fibres, and re-arrange them artificially. It is unwise to card wool of great length, because it could not fail to be broken when seized by the various card wires. Wool which measures over 6 or 7in. in length ought not to be put through the carding engine, but reserved for the preparers. Very often wool longer than this is carded; but this increases the percentage of noil, which has ultimately to be removed.

150. The Worsted Card—General Details. A carding engine consists of a series of rollers of various sizes, running at different speeds and revolving in opposite directions. These rollers are covered with card clothing—*i.e.*, wire teeth fixed in a foundation of material which, while it endows them with a certain amount of rigidity, is sufficiently elastic to allow them to respond to the strain of the matted wool.

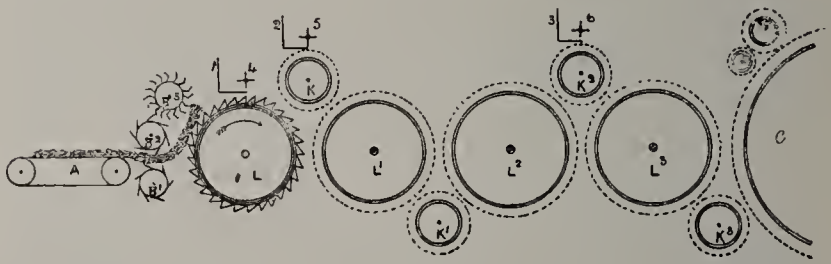

Fig. 59.

Figs. 59, 60 and 61 are diagrammatic representations in sectional elevation from the feed to the delivery end of a modern worsted card. Fig. 59 shows the feed and opening rollers; Fig. 60 the two swift carding machine with the respective complements of rollers, clothing, relative positions and direction of rotation and Fig. 61 the finishing and balling end of the machine. A is the feed lattice which brings up the wool to the feed rollers B^1, B^2 and B^3, the two bottom ones taking it in, while the top roller acts as a clearer for the middle one. L, L^1, L^2, L^3, are four lickers-in for opening the wool somewhat before it comes to the carding parts proper. K to K^3 are the clearers which transfer the wool from one licker-in to another. 4, 5 and 6 are burring rollers, having projecting flanges which knock the burrs or other solid bodies into the trays 1, 2 and 3 respectively. C and C^1 are the cylinders or swifts, whose function it is to carry the wool along from roller to roller and also to open the staples in conjunction with the workers; W

to W^5 are termed workers because they are immediately concerned in the working of the wool. S to S^5 are the stripping rollers which take the fibres from the workers and replace them on the swift and F and F^1 are the "fancies" which serve as brushes to lift up the wool that has become embedded in the wires so that it may be readily placed upon the doffer D, from which it is transferred by the angle stripper A S to the second swift C^1; here the treatment it receives is similar to that of the first swift, but when it reaches the last doffer, a comb T, works rapidly up and down in contact with the teeth of the doffer, and the thin film of carded sliver at the point where the sliver must be removed from the card wires.

In the card the wool is opened and mixed by the different rollers which have just been described, until it reaches the last doffer when the fibres are completely separated and distributed over its surface as a very light, thin web made up of fibres of all lengths but without any definite arrangement. This is stripped off by the doffing or fly comb T, and generally passed through a pair of press or drawing rollers to the balling head or coiler. This web is focussed in a funnel which imparts a little false twist to it, converting it into a soft, rope-like sliver, which is then wound on to a bobbin or run into a can in readiness for the next operation. The "baller" method of winding the carded sliver on to a bobbin is the arrangement usually adopted.

This is illustrated by the sectional view Fig. 61, where the thin film of carded sliver CS is shown passing from the doffer D^1 to the balling head roller R. The parts shown on this diagram are:—D^1, the last doffer; T, the doffing knife; PP, the press rollers; Q, the funnel for imparting the requisite amount of false twist which enables the fibres to retain their hold upon each other until the next operation is reached. R is the bobbin spindle on which the sliver is wound. This

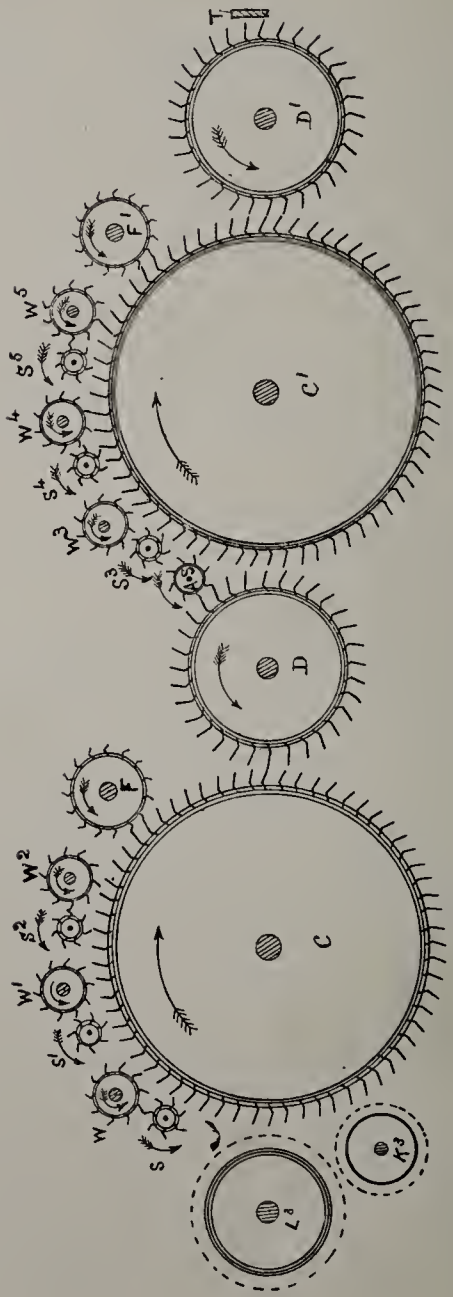

Fig. 60.
Transverse Section of Two Swift Worsted Card.

bobbin receives a compound rotary and lateral motion so as to wind the sliver from end to end of the bobbin and to cross it as much as possible. U and V are two rollers between which the bobbin R is free to rotate. The action of these rollers is somewhat peculiar. They fit loosely on the shafts, which have a keybed running from end to end. Fized in the rollers are keys, so that while the shafts turn them, they can also traverse from side to side. This movement is secured by a disc with a short stud fixed underneath them, which works in a slot attached to the supports for holding the bobbin in its proper place. Iron ends are placed in the bobbin, which run under sliding weights, so that the wool is pressed firmly against the balling rollers to ensure even winding and building. When full, the bobbin is taken out of the ball and refilled, being only used as a kind of core during the making of the ball. The wool is now ready for the succeeding operations.

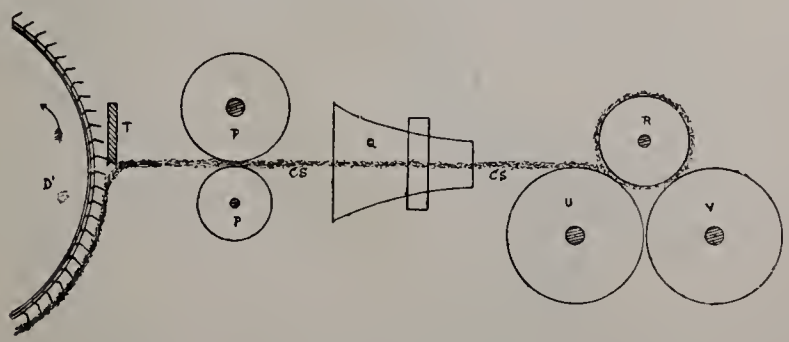

Fig. 61.
Section of Balling Head Worsted Card.

151. Automatic Feeding. Automatic feeding is now extensively adopted in the worsted, woollen, cotton and flax trades. It is an attempt to avoid the production of an uneven sliver which results from irregular hand feeding. It is essential that the carded sliver should be as nearly as possible uniform throughout its entire length, for if a given yard weighs

18 ozs., a second yard 20 ozs., and a third 22 ozs., it naturally increases the difficulty of the wool comber to subsequently produce a regular weight of combed top.

The mechanism is designed to automatically deliver from bulk, a given weight of wool into an adjustable scale pan within a fixed period of time. The quantity of wool weighed and delivered with each cycle of movements can readily be modified to suit different classes of wool and required weights of carded sliver.

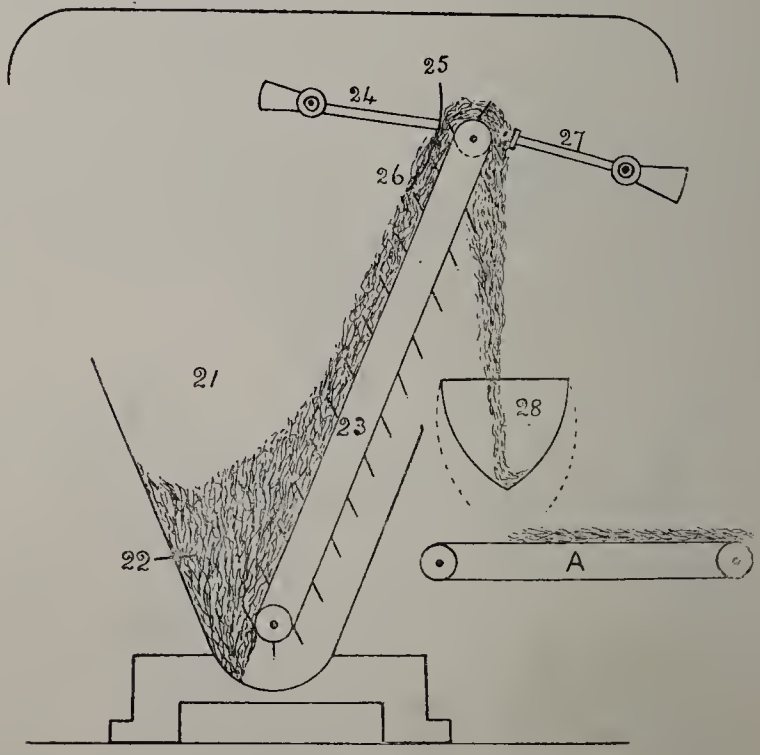

Fig. 62.

Automatic Hopper Feed.

The whole of the mechanism is operated from the feed rollers B (Fig. 59), combined with suitable toothed gearing, cams and levers. The chief features of this mechanical arrangement are diagrammatically represented at Fig. 62. It consists essentially of a receptacle

21, termed the hopper, into which the wool 22 is placed. At the bottom a grating is often placed to allow loose impurities to pass out of the way. In the hopper an oblique apron 23 is driven intermittently from the feed rollers and connections referred to. The apron is studded with spikes which are free to pierce the wool 22, and carry it slowly upwards in the direction of the spikes as shown in the illustration. 24 is an oscillating comb having a motion indicated by the arc 25 and 26, which serves to remove the surplus wool from the lattice should it take up too much. 27 is a second comb similar to 24, which strips the wool from the lattice and causes it to fall into a pan 28, attached to the ends of two levers, which carry adjustable weights at the other ends. The levers work on knife edges, so that when the pan has received its full weight its position and is altered the oblique apron is stopped to prevent any delivery of wool. The sides of the pan open and the wool falls out on to the feed-sheet A in a suitable condition for the carding. As the scale resumes its proper position the wings close, the spiked lattice is restarted, and the delivery begins again. On the feed lattice the wool is spread out by an oscillating board, which also presses it more closely together. In some machines the scale pan 28 is controlled by a rack and pinion, and so made to turn over and empty its contents periodically and automatically on to the feed sheet A.

152. Sizes of the various Rollers.

The dimensions of the various rollers are points of importance, but probably few men will be found who hold precisely the same opinion upon this question. One axiom may, however, be laid down—viz., that all the rollers immediately concerned in working the wool should be as large as convenient, so that as many wires as possible may be engaged with each other in separating the staples. Herewith are given approximate sizes of the different rollers suitable for medium and fine wools :—

Swifts or cylinders	54in. diameter.
Doffers	40in. ,,
Fancies	14in. ,,
Workers	12in. ,,
Strippers for swifts	5in. ,,
Angle strippers	7in. ,,
Lickers-in	20in. ,,
Strippers	14in. ,,
Feed rollers	...2½ to 4in. ,,

In some machines when low, coarse wools have to be worked, the lickers-in and strippers are replaced by a breast and its complement of rollers. This is really a miniature swift running at a slow speed and covered with coarse clothing, but it can hardly be said to be satisfactory, since it neither affords the same opportunity for opening the staples nor getting rid of burrs and similar impurities.

153. Driving the Card Rollers.

As might be expected in a machine so complicated as the carder, the arrangements for driving the various parts are somewhat intricate. In the first instance, the *last* swift generally receives the power from the main shaft of the room, this in turn driving the first swift by means of a strap. Each swift drives its own doffer by a belt running on a pulley carrying the change wheel, by means of which the speed of the doffer may be regulated in order to increase or diminish the quantity of wool deposited on its surface. The workers, which have a very slow motion, are turned by means of a chain from the end of the doffer. A pulley attached to the swift drives the strippers and fancy by means of a strap, their speed being necessarily greater than that of the worker to enable them to remove the wool. The fastest rollers in a carder are the fancies, (and here we might say that when the speed of rollers is referred to, in all cases it is the surface velocity—unless otherwise stated). The first swift usually drives the fourth and third lickers-in, the third in turn driving the second and first.

Fig. 63 diagrammatically illustrates the method of driving the workers, angle stripper and the doffer, and Fig. 64 similarly illustrates the arrangement for driving the strippers and fancy.

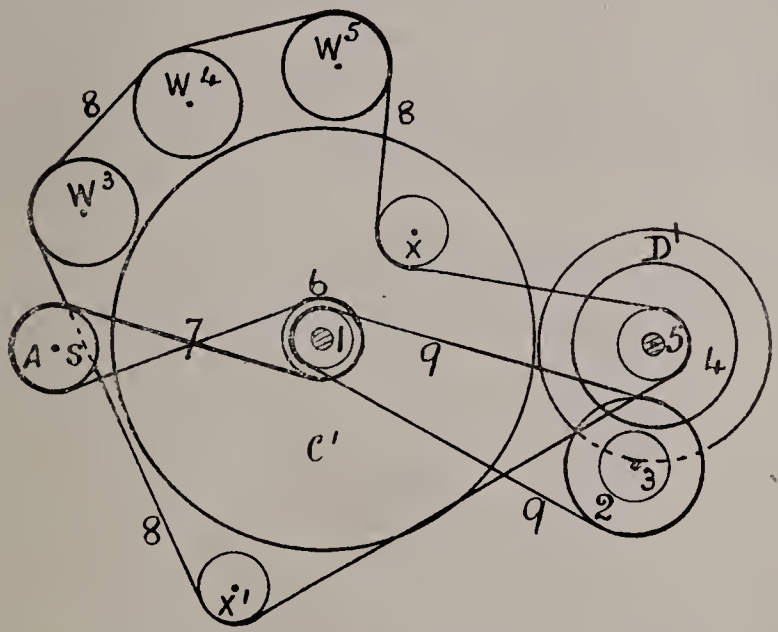

Method of driving workers, angle stripper and doffer.
Fig. 63.

No. 1 indicates a small driving pulley 7 inches in diameter secured to the shaft of swift C^1, revolving at the rate of 100 revolutions per minute. A belt 9 as shown passes round and communicates motion to a second pulley 2, which is 15 inches in diameter. Compounded with this pulley is a spur change pinion 3, containing 20 teeth which in turn gears into a larger spur wheel 4, with 250 teeth, secured to the doffer shaft, by which means the doffer D^1 is rotated. Secured to the doffer shaft is a chain pulley 5, having 10 teeth. Similar sprocket chain wheels, each containing 13 teeth, are fixed on the ends of the worker shafts W^3, W^4, W^5. A

chain 8, then passes round these sprocket wheels together with two adjustable pulleys X and X^1, and communicates the requisite rotary movement to the workers. A pulley wheel 6, of 12 inches diameter, drives the angle stripper pulley AS, 13 inches diamteer, by means of a cross belt 7. The driving of the stripper and fancy is accomplished on the opposite side of the card, where C^1 represents the swift. The driving pulley 10, of 36 inches diameter is secured to the swift shaft.

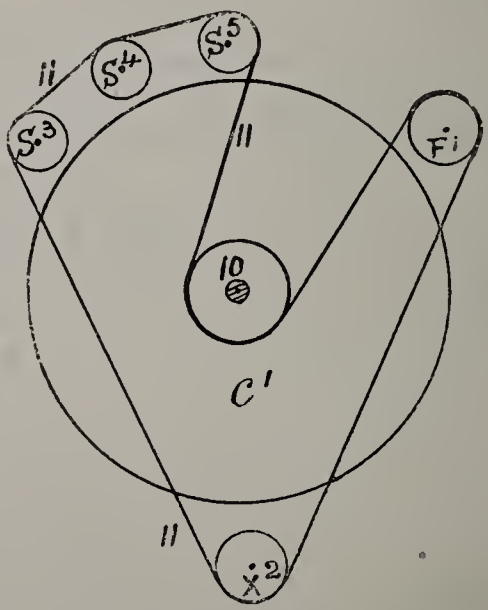

Method of driving strippers and fancy.

Fig. 64.

Motion is communicated by the belt 11 to the pulley rollers, each 13 inches diameter, on the ends of the strippers S^3, S^4, S^5, and the fancy F^1 of 7 inches diameter. The uniform tension of the belt is regulated by the adjustable pulley X^2 around which the belt passes as indicated in the diagram, Fig. 64.

154. Formula for calculating speeds of Card Rollers. The method of calculating the speeds of the various rollers is simple when all the factors are known. The principle of the solution is the same as detailed in connection with drafting in gill boxes, see page 184.

The respective formulæ for each set of rollers are here given, by the aid of which the rate of revolution and surface speed of each group of rollers can be readily ascertained.

$$(1)\ \text{Rev. of doffer} = \frac{\text{Rev. Swift} \times \text{Dia. Pulley 1} \times \text{Change Pinion 3}}{\text{Dia. Pulley 2} \times \text{Spur Wheel on Doffer}}$$

$$(2)\ \text{Rev. of Workers} = \frac{\text{Rev. Doffer} \times \text{No. teeth in Chain Wheel 5 on Doffer}}{\text{Teeth in Chain Wheel on Workers}}$$

$$(3)\ \text{Rev. of Angle Stripper} = \frac{\text{Rev. Swift} \times \text{Dia. Pulley 6}}{\text{Dia. Pulley on A S}}$$

$$(4)\ \text{Rev. of Stripper} = \frac{\text{Rev. Swift} \times \text{Dia. Pulley 10}}{\text{Dia. Stripper Pulleys}}$$

$$(5)\ \text{Rev. of Fancy} = \frac{\text{Rev. Swift} \times \text{Dia. Pulley 10}}{\text{Dia. Pulley on Fancy}}$$

The surface speed in feet per minute for each respective roller =

$$\frac{\text{Rev. of Roller} \times 22 \times \text{Inches in diameter}}{7 \times \text{Inches per foot.}}$$

155. Principle of Carding. Before any attempt is made to understand the relative action of the various rollers, attention must be given to the possible ways in which the wires work with regard to each other. At A (Fig. 66) a representation is given of a wire after its removal from the foundation. Four parts may be distinguished which it is important to remember. P P are the points, K K the knees, H the heel or crown, and F F the face or smooth sides of the wires. A front elevation of a wire is given at B and

a side elevation at C. Now card wires work together in three ways—viz., point to point, point to face or smooth side, and smooth side to smooth side. Where the wool is worked and the fibres separated, then the wires must work point to point; to remove the wool from one roller to another requires the wires to run point to smooth side; when the fibres have to be raised out of the wires, then the cards must work smooth to smooth side. It may perhaps render a comprehension of the functions of the various rollers less difficult if it be observed that, strictly speaking, there are only two operations in carding, the working of the wool and the stripping from one roller to place on another.

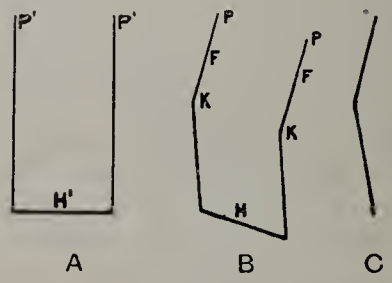

Fig. 66.

Fig. 67 shows how the various actions are brought about. Taking C to represent the swift and W the worker, it will be seen that if C has the greater surface velocity, then the wires will meet point to point, and if C is carrying forward a projecting staple of wool, then it will be engaged by the slowly retreating wires of W. The result will be that a contention will take place for the possession of the wool, and each will carry off a portion, while both ends of the staple will have been combed by the pulling action of the two rollers. Supposing now their relations be reversed, and W given the greater velocity, then instead of the wires working point to point they will run smooth side to smooth side, and

W perform the functions of a fancy. Here, then, is seen that the difference between the workers and fancy is merely a question of speed. At S and W^1 are shown the relations of the stripper and worker. S is the faster

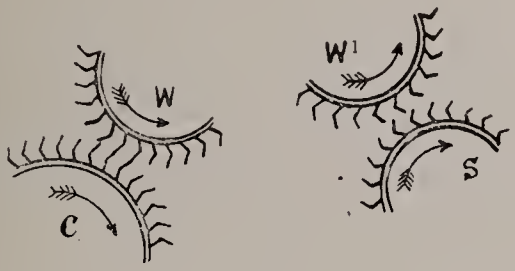

Fig. 67.
Relation of Workers to Cylinders and Strippers.

roller, the result being that the points of its wires work against the smooth side of the wires on W^1. Therefore, any wool which they may be carrying will be caught by S and carried forward. In this way S acts as a clearing roller to W^1.

CHAPTER XIX.

CARD CLOTHING.

156. *Forms of Card Clothing.* 157. *Clothing Foundation.* 158. *Card Wires.* 159. *Carding Properties of Different Card Teeth.* 160. *Setting Wires in Clothing.* 161. *Card Clothing Calculations.* 162. *Clothing for Worsted Card.* 163. *Clothing for the Opening Rollers.* 164. *Neps, Lumps or Motes.*

156. Forms of Card Clothing. At this stage it will probably be advisable to devote a little attention to the nature of the "card clothing" used for covering the rollers. Of course, the character of the clothing will be in the first instance determined by the class of material to be treated. It will be obvious that short and fine, soft wools will require very different cards from strong and long wools; but apart from the specific differences necessitated by the dissimilarity of the material, there are certain general principles to be observed with regard to the structure of the foundation and arrangement of the wires. Clothing is made either in *sheets* 5 *in. wide, which is taken as the standard*, or in *fillets*, which vary in width from 1 to 2 in., according to the size of the roller they are to cover. The use of sheets is gradually dying out, and speaking generally, worsted cards are now made in filleting, although there are some carders who prefer sheets for the swifts, fancies, and some of the doffers, because if a portion of the sheet begins to "go" or wear, it can easily be replaced, whereas when a fillet "goes" it frays rapidly and must all be renewed. There is therefore this advantage in using sheets, that they can be readily removed

when damaged, without having to reclothe the whole roller.

The filleting is wound on to the card rollers in spiral form, and this must be done with uniform tension throughout the entire length. To secure the clothing firmly in position the cylinder is drilled longitudinally at intervals, and the holes plugged with wood to which the clothing is nailed.

157. Clothing Foundation. The materials used for a foundation in which to fix the wires, are leather and a combination of vulcanised cotton and linen cloth. A primary requirement of the foundation is that it must be sufficiently strong to enable it to be stretched tightly upon the rollers without disarranging the teeth, and that it must possess enough rigidity to enable the wires to hold the wool, and yet be so elastic as to bring them back to their proper position when released. Where great strength and rigidity are necessary, as in the case of the feed rollers, then leather is employed, and sometimes also on the fancy, when special flexible teeth are used. The chief objections against its use for the other rollers are, firstly, that it throws all the strain upon the wires instead of assisting them, and secondly, that the wires work loose in the holes, the leather not being elastic enough to hold them firmly and leave them flexible.

The combination foundation is composed of, from three to six or seven plies or layers of cotton and linen, securely cemented together and covered with a layer of very elastic vulcanised rubber. The thickness of the foundation varies according to the coarseness of the card and the thickness of the wire used—the fewer the number of wires used and the greater their thickness, the stronger must the foundation be made. Additional thickness is gained by increasing the number of plies. For general purposes, however, two layers of cotton, then one layer of linen and another of cotton, are

sufficient, while for very fine wools three-ply foundation is used. Where great strength and resistance are required, as in the licking-in rollers, then six and seven-ply is resorted to.

The layers are twill-woven to give them strength and compactness or body, so as to render them more elastic, for when fire wire is used—if held too firmly—it is liable to bend where it leaves the foundation, or when hardened and tempered it may break out. It must be remembered that although the teeth should be gripped firmly they must not be too rigid, but be able to recover themselves after being moved. The indiarubber is used to give the required elasticity at the point where the tooth leaves the foundation.

158. Card Wires. The desideratum in wire for making the teeth is a perfectly smooth surface, for when it is borne in mind that to obtain the best results in the yarn from the wool, the delicate serrated surface of the fibre must be preserved from injury as much as possible, it will be seen that the wire which—all other things being equal—is capable of receiving the most highly-polished and smooth surface is the best. Iron is quite obsolete, having been supplanted by steel wire, which is also hardened and tempered. This has longer life, and it is also capable of receiving and retaining a much better working point. Where the wool is carded in a dry condition, plain bright steel wire is employed; but when it is (as is often the case) damp, then the wire is covered with a coating of tin which prevents the teeth becoming rusty.

The kinds of wire used are round and oval. Usually the first licker-in is covered with oval teeth, or Garnett clothing, so as to leave a great distance between the individual wires, for here the wool is in the worst condition for carding, the staples being still attached and the fibres more or less matted together. It is obvious that if a clothing full of wire were used, it would soon become

damaged, in addition to causing a serious breakage of the fibres. For the other rollers, round wire is generally adopted, so as to have as much carding surface as possible, without being too full in the wire, and always on the fine side rather than otherwise.

159. Carding Properties of Different Card Teeth. It is generally acknowledged that the retentive power of a card tooth is dependent upon the area of its point. The smaller the points the greater the weight of wool carded, as well as the amount of carding it receives. This, however, must be modified considerably according to the class of wool used: if it be matted and stringy, it will be obvious that different conditions must prevail than when it is free and open. That the point of the wire is a very important factor is shown by the constant endeavour made by carding engineers to keep it sharp. Inseparably associated with this question is the setting most suitable for different wools. While it is admitted that a pointed wire is superior to an obtuse one, and that the holding power diminishes with a decrease in its area, one most not run away with the idea, that the same clothing may be used successfully for all classes of wools, providing that the apices of the teeth are adjusted to the peculiarities of the materials to be carded.

160. Setting Wires in Clothing. The form of the card wire is really three sides of a rectangle (see Fig. 66). There are four methods of setting these card teeth in the foundation; these are illustrated at A, B, C and D, Fig. 68. B shows plain setting, the dots representing the points and the lines the crown. This style is, however, rapidly dying out owing to the teeth not being distributed equally over the surface. It will be seen that there are two points close together, while the first point of the next pair is double the distance away. Plain setting, when adopted, is best for sheet cards, as they can be nailed on to the rollers better than the

fillets, since the teeth are not uniform at the edge, but alternate with spaces, whilst in fillets a gap would be left at the edge of each lap. For filletting, the ribs, A and C and twill setting D are universally employed. Here it will be seen that the teeth are arranged equidistant, which ensures better working off the wool. A

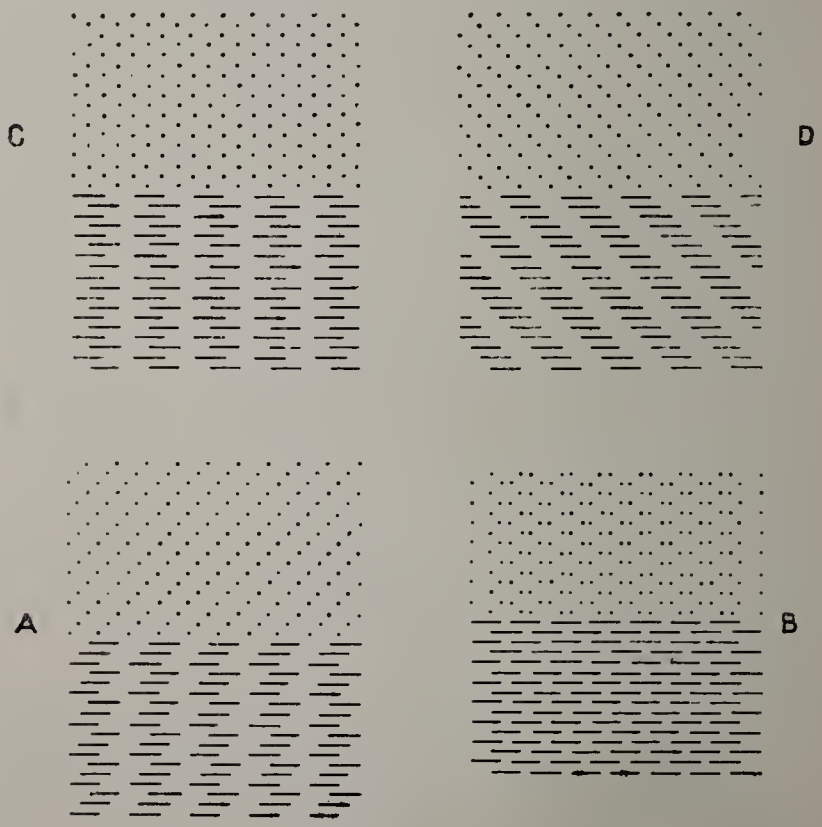

Fig. 68.

Reverse Side of Card Foundation, showing four different methods of setting card wires.

difference of opinion exists as to the comparative merits of these two systems, it being held by some that the twill set produces a more even working of the fibre. Whether this is so or not, it is more difficult to strip the wool from roller to roller than when rib set is used, hence

the rib is employed for the working and stripping rollers, as well as the swifts. For the fancy, twill set cards are often used, because the wires being arranged obliquely, the teeth are more completely scattered and do not work in straight lines, thus preventing the swift becoming "roked," as well as clearing it more effectually.

161. Card Clothing Calculations. The number of wires per square inch indicates the "fineness of the card." The "counts" is the number of teeth in 5 in., reckoned down the card; thus if there are 80 teeth in that length, the card is said to be 80's counts; 100=100's counts, and so on. The crown represents the number of heads of wire per inch across the back of the card; each wire has two teeth or points projecting on the face of the card clothing (see B, Fig. 66). 10's crown=10 wires per inch at the back of the card and $10 \times 2 = 20$ teeth or points across the face of the clothing. Sometimes the number of teeth or points across the face of the card are reckoned instead of the crown, in which case it is necessary to specify. Both the counts and crown have to be taken into consideration in estimating the fineness which equals therefore the counts $\times$ by the crown $\times$ 2 $\div$ 5 = teeth per square inch. For example: suppose we have a fillet A, Fig. 68, with four ribs per inch, and 125's counts. To find the teeth per square inch, take the ribs first: since each rib has three wires and each wire two teeth, the crown will equal 4 ribs$\times$3 wires per rib=12 wires or crown, and 12's crown$\times$2 points each=24 points per inch across the face of the card; then $(24 \times 125) \div 5 = 600$ teeth per inch; *e.g.*, the number of points which a swift 54 in. diameter by 72 in. wide would contain=pins per square inch$\times$circumference of swift in inches=

$$600 \times 72 \times 54 \times \frac{22}{7} = 7{,}331{,}657.$$

To ascertain the amount of clothing for the card rollers proceed as follows:—

(1) Length of filleting required, in feet=

$$\frac{\text{Diameter of roller} \times \frac{22}{7}}{\text{Width of filleting} \times \text{inches per foot.}}$$

(2) Number of sheets required=

$$\frac{\text{Diameter of roller} \times \frac{22}{7}}{\text{Width of sheet in inches.}}$$

At this juncture the student might with advantage calculate, as an exercise, the approximate pre-war cost of clothing for any or all the rollers of the given worsted cards, Figs. 59 to 65, details as on pages 221 to 231, assuming the charges for clothing material to be as follows less 10%, except for fancies which should be reckoned net.

Counts	60	70	80	90	100	110	120	130	140	150
Crown	6	7	8	9	9	10	10	11	12	12
Sheets 60 × 5in	6/2	6/3	6/5	6/8	6/11	7/2	7/6	8/–	8/8	9/–
Fillet 1in. wide	$2\frac{7}{8}$	3	3	$3\frac{1}{8}$	$3\frac{1}{4}$	$3\frac{3}{8}$	$3\frac{1}{2}$	$3\frac{5}{8}$	$3\frac{3}{4}$	$3\frac{7}{8}$
do. $1\frac{1}{2}$in. ,,	$4\frac{1}{4}$	$4\frac{3}{8}$	$4\frac{1}{2}$	$4\frac{5}{8}$	$4\frac{7}{8}$	$5\frac{1}{4}$	$5\frac{3}{8}$	$5\frac{1}{2}$	$5\frac{5}{8}$	$5\frac{3}{4}$
do. 2in. ,,	$5\frac{3}{4}$	6	6	$6\frac{1}{4}$	$6\frac{1}{2}$	$6\frac{3}{4}$	7	$7\frac{1}{4}$	$7\frac{1}{2}$	$7\frac{3}{4}$

Feed Roller, $\frac{1}{2}$in. fillet at $3\frac{1}{2}$d. per foot.
Licker-in, 1in. fillet at 6d. per foot.

162. Clothing for Worsted Card. In the table on page 250 are given some particulars taken from cards at work upon different wools, after which the principles involved can be discussed. It must be borne in mind that in the clothing employed by different carders for dealing with the same class of wool, a very wide margin exists, so that these must be taken as being approximate, although they are the outcome of a large

Rollers.	Fine Wools.			Medium.			Coarse.		
Feed rollers	Needle point. Strong oval diamond-pointed wire.			Needle point. Strong oval diamond-pointed wire.			Needle point. Garnett clothing		
First licker-in.....									
	Crown.	Counts.	Wire.	Crown.	Counts.	Wire.	Crown.	Counts.	Wire.
Second licker-in.....	7	70	27	7	65	26	7	60	26
Third ,,	8	80	28	8	70	27	7	65	27
Fourth ,,	8	90	30	8	75	28	7	75	28
First divider.....	8	60	24	5	50	25	5	50	24
Second ,, ...	7	75	26	6	65	26	6	65	24
Third ,, ...	8	85	30	7	75	28	7	75	26
Fourth ,, ...	10	100	32	9	95	30	8	90	28
First swift.....	11	135	34	10	120	34	10	100	31
First workers.....	10	125	35	9	110	31	9	95	30
First strippers.....	9	90	31	6	80	28	6	60	26
First fancy.....	8	80	33	6	65	29	6	60	27
First doffer.....	11	135	34	10	125	34	10	105	30
Second swift.....	12	140	35	11	130	35	11	115	34
Angle stripper.....	9	90	31	6	80	27	6	60	26
Second workers.....	12	145	35	10	120	35	10	110	32
Second strippers.....	10	110	32	8	90	31	8	80	30
Second fancy.....	9	100	34	7	70	33	7	70	32
Second doffer.....	12	140	35	11	135	35	11	120	35

Clothing details for Worsted Card.

number of comparisons from various experienced sources. Further than this, there are many intrinsic causes which exercise a controlling influence upon the fineness or otherwise of the clothing used. These will be referred to later on.

163. Clothing for the Opening Rollers. It will be seen from the above that the clothing gradually gets finer as the distance from the feed rollers increases. A consideration of the functions which the clothing on the various rollers performs will assist in understanding the reason for this. Beginning with the feed rollers, the staples at this stage still retain to some extent their natural arrangement, although the fleece has been separated somewhat by willeying, still the wool remains more or less in the form of staples, which must first be separated. The initial duty is done by the feed rollers and the first licker-in, and from what has been said it will be readily seen that here the clothing must be exceedingly strong and possess great retentive power. To obtain a maximum presence of these qualities the teeth of the feed rollers have a special construction, as shown at B, Fig. 69. It will be observed that they are essentially different from the general type of card-teeth previously described, being made very "keen" and without "knee," as well as having a needle point which enables them to readily penetrate through the matted wool. They are fixed in a strong leather foundation in order to make them as rigid as possible. The relative action of the feed rollers and the first licker-in is a point of primary importance.

It is obvious that if by their joint action the staples are to be opened and the fibres separated, three conditions are essential—the licker-in must have finer clothing than the feed rollers, as well as a greater speed, and it must also possess a strong tooth. To secure the last requirements, two forms of clothing are available—the vulcanised combination foundation of 6 or 7-ply, with

strong wire teeth (oval in cross section), ground to a diamond point (Fig. 69, C), or the Garnett clothing, which consists of a strip of steel having at one edge a flange, the teeth being cut out from the opposite edge (Fig. 69 A). The licker-in has to perform a double duty—the combing out of the fibres as well as separating the staples. In the case of long, strong and matted wool, the feed rollers must be set farther away from the licker-in than when features of an opposite character prevail. Each staple should receive a partial combing and straightening before being pulled away from the bulk, the object being to ensure the detachment of the individual fibres, so as to prepare

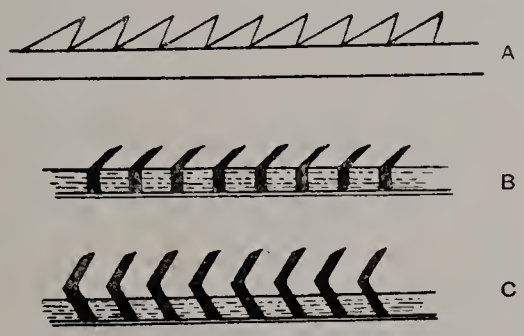

Fig. 69.
Three types Card Clothing for Opening Rollers.

the staples for the action of the subsequent rollers. The constant passage of the teeth between the fibres as they are brought forward by the slowly-revolving feed rollers facilitates this arrangement. The most suitable form of tooth for effecting this becomes, therefore, an important question, because the greatest injury and breakage of the wool occur at this stage. A reference to Fig. 69 will show that A and C are the best for the purpose, because when they strike the staple the narrowest portion of the tooth first engages it, and prepares the way for the thicker part. The continual lashing of the fibres by the teeth of the licker-in removes a large number of them simultaneously, which conse-

quently become embedded among the teeth and form a thin layer of wool on the licker-in as it revolves. It will be clear, however, that the licker-in only acts on the staple, straightening and removing its fibres, so long as it is held by the teeth of the feed rollers; directly it is released it is carried away to the next roller. Seeing, therefore, that the amount of combing which the staple receives is dependent upon the length of time it is held by the feed rollers, the adjustment of the latter becomes an important question. It will be obvious that if much space intervenes between them and the licker-in, especially in the case of short wools, a considerable number of droppings will occur, composed principally of the shorter tufts of wools. Further than this, many of the staples will be removed in an unopened condition from the supply, and will merely ride upon the tips of the teeth. When this occurs it detracts very materially from the efficiency of the machine, because as soon as they reach the burring rollers the staples are removed from the surface of the roller. It must also be borne in mind that the burring rollers depend for their success upon the wool being evenly distributed over the licker-in in the form of a thin layer whose individual fibres are embedded among the teeth. This causes the burrs and other solid impurities to hang loosely from the teeth, being held only by a few fibres, and they can readily be knocked off by the flanges into the tray provided as previously explained.

The nearer the feed rollers are placed to the licker-in, the longer do they retain hold of the staples.

164. Neps, Lumps or Motes. It is important that the sliver should be kept as free as possible from neps, lumps or motes. A frequent cause of this defect is unsuitable clothing or the breakage of the fibres by the wrong adjustment of the various rollers in relation to each other. In most Botany wools the fibres become more or less matted or felted together

during the operation of scouring. This renders the work of opening and separating them more difficult, and increases the risk of injury through breakage during the process. Under circumstances of this kind the treatment which the wool receives is unquestionably severe. Held by the feed rollers, the matted staple is gradually reduced by the abstraction of fibres by the licker-in, the longer being engaged first and the shorter as they are brought forward. This continual removal must ultimately result in there being left behind a small collection of short fibres not long enough to reach the licker-in. They are, however, ultimately placed upon it through the agency of the top feed roller, which acts as a clearer for the middle one. But having become so entangled, and in addition being composed of very short fibres undoubtedly broken from other fibres, they are never thoroughly opened, even after passing through the card. The longer fibres are removed and straightened by the second and succeeding licker-in, but a nucleus remains, which consists of very short fibres closely matted together, technically known as "neps" or "motes." Many of them sink to the bottom of the teeth, and are removed when the cards are cleaned, but some make their way through with the wood, and may be seen in the sliver as it leaves the doffer.

That neps or motes are produced by the carder is certain, because they are not present in the wool either when greasy or after scouring. If the wool be measured before and after passing through the card, it will be found to be much shorter, while the percentage of very short fibres is materially increased. Seeing, therefore, that the success of the preparatory opening is practically dependent upon the retentive power of the feed rollers, they should always be kept in the best condition for securing this. In some cases, however, they are filled up with grease and dirt until sometimes only the apices of the pins are visible. Under circumstances of this

kind their holding capacity must of necessity be greatly diminished, and instead of being gradually dissected, the staples are carried forward and receive comparatively little disentanglement. This means that an additional strain is afterwards thrown upon those rollers which are least able to bear it.

In some cards the feed rollers are covered with Garnett clothing, but we cannot say that this is advisable. Its holding power is not equal to the strong needle-pointed wire, and there is a greater tendency for the wool to wrap round the rollers owing to the teeth being set too closely. This must, of course, reduce their influence, for if carding is to be well done it is imperative that the feed rollers should be free to act on the wool. When they are working properly much of the small solid impurities which, if carried forward, would injure the other teeth, fall out when the fibres are separated. The major portion of the work is done by the two bottom rollers; these are engaged in drawing in the wool and holding it as well, and the top one being a clearer, should be clothed with rather finer clothing than the others, and its speed should also be slightly quicker so as to remove the unopened wool ready for the licker-in.

CHAPTER XX.

SETTING, SPEED, FUNCTIONS AND GRINDING OF THE VARIOUS CARD ROLLERS.

165. *Setting the Rollers.* 166. *Relative Speeds of the different Rollers.* 167. *Functions of the Card Rollers.* 168. *Grinding.*

165. Setting the Rollers.

The primary factor upon which the efficiency of the card depends, no matter how suitable the clothing may be, is the proper adjustment of the various rollers with regard to each other and the duties they have to perform. Indifferent setting not only produces bad work, but in addition seriously injures the clothing. The manner of setting each roller is in the first instance determined by what it has to accomplish, *e.g.*, to set the workers like the fancy would be both ruinous to the clothing and the wool. Before it is possible to set the rollers so as to work with any degree of success there are certain points which require careful attention. Prior to clothing, each roller should be accurately tested to certify that it is perfectly true; should any deviation from the true circuit take place after clothing it would result in the wires or card teeth working into each other at intervals and thus damaging one another. Wooden rollers are the more liable to vary in this respect than iron, but still the remedy is not a very difficult process and whenever the work and conditions permit they are preferable because lighter and require less power to

drive them. If, however, the carding is to be done on the ground floor, and especially where there is any tendency towards dampness, it is advisable to have iron rollers. They are certainly more rigid, and no trouble arises through warping owing to the moisture; but if they happen to get untrue, some difficulty is generally experienced in making them right.

Another essential is that the clothing must be stretched tightly and be well laid on to the rollers; and this is especially the case with the swift, which from its size and high superficial speed often causes the sheets to become loose and flabby. If this occurs and is not remedied at once, the wires are gradually worn down until, when the rollers come to be re-set and the sheet refastened, a hollow place is the result. When the rollers are true and the cards properly fixed the wires must all be the right level or length so as to avoid any working into the others. When these requirements have been secured, the carder may next be set, but here again no precise rules can be given. The space separating the rollers will depend entirely upon the class of wool to be carded, and also on the character of the clothing, whether it is in good or bad condition. For short wool the rollers must be set nearer than for long wool, and as the fibres become more opened the rollers should be set closer. The old method of setting the card cylinders according to judgment, sight and ear is gradually being discarded. All setting should be done by means of gauges (Fig. 70)—*i.e.*, strips of steel about 1 in wide and 7 or 8 in. long, of different thickness. After having approximately arranged them, the gauge should be passed between the rollers across the machine, and any alteration made by the screw adjustment. Appearance must not be taken as any guide, because, owing to the reflection of the light by the wires, it is liable to be very deceptive. Experience, class of material, and what is required must determine the position of the rollers,

but the gauge must be used to see that this is properly attained. A series of from Nos. 20 to 33 on the Imperial wire gauge will cover all ordinary requirements, keeping in mind that the thickest are used for the front portion of the card. (See Table I., Vol. II., page 445.)

The approximate setting for the principal rollers may be taken as follows :—

Feed rollers and lickers-in...	(20+22) wire gauge
Lickers-in	... (24+28) ,,
Strippers and Workers	... 26 to 28 (1st group)
Strippers and Swift	... 28 to 30 (2nd group)
Workers and Swift	
Swift and Doffer ...	... 1st, 25 2nd, 28.

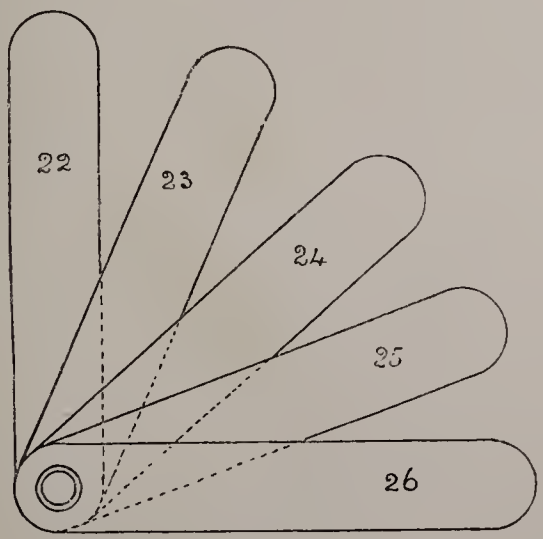

Fig. 70.

Generally speaking the rollers should be set widest apart at the feed end, and gradually reduced in distance apart between the successive cylinders towards the finishing end of the card.

166. Relative Speeds of the different Rollers. The relative speeds is a much disputed point but nevertheless a very important factor. Each roller has its own speed, although few will agree as to what it should be. There is probably no machine in which the judgment and thought of the overlooker are more frequently required in adjusting and determining the relative speeds of the various parts. At the outset, there is no advantage in running at a fast speed when less will do. It only increases the wear and tear of the clothing and all other portions of the machine, as well as causing them to " throw " the wool. The feed rollers only bring in a certain quantity, and this has to be distributed over a large area. Taking for example $\frac{1}{2}$ lb. per minute as their capacity then if the swift be 50 in. diameter and making 85 revolutions, it follows that the wool is spread over 1125 feet. Between these two points the intermediate rollers should be so regulated that there is a gradual increase from the feed rollers to the swift.

To illustrate this, consider the following taken from a card at work :—1st licker-in, 50 feet per minute; 1st divider, 100. 2nd licker-in, 220; 2nd divider, 370. 3rd licker-in, 520; 3rd divider, 700. 4th licker-in, 840; 4th divider, 980. To enable the workers to collect the wool they are run very slowly, in this case 14 ft. per minute; the strippers between the workers and swift at 430 feet; while the fancy is taken at one-fifth higher speed than the cylinder. and the doffer at 72 feet. These are for the first swift. On the second their speed is slightly reduced; thus the workers are run at about 12 and the doffer at 50 feet per minute. The speed of the strippers is immaterial, since their function is simply to receive the stock from the worker, to be in turn delivered up to the main swifts. The surface velocity of the stripper should be greater than the workers, and less than the swift, and between these two there is a large margin.

For *coarse* wools, the workers and strippers are usually run relatively faster than for *fine* wools, because the former kind do not require to be so thoroughly carded. These figures will serve to show approximately the relation between the different rollers, but they must not be taken as an invariable guide, for the engineer has always to consider the nature of his cards and the character of the wool.

167. Functions of the Card Rollers. The proper arrangement of the *feed rollers* B^1 B^2 and B^3 with regard to each other and the *licker-in* is a point of importance often overlooked. A reference to the feed end of Fig. 59 will show their correct position. They should be arranged so that each centre B^1 B^2 and B^3 is concentric with the licker-in. This ensures the proper clearing of them all. If placed in a true vertical position, the top roller would require to be made larger than the others, which would therefore make it impossible to place them near to the licker-in L, if required, or otherwise the roller B^3 would fail to clear roller B^2. The rollers should be set perfectly true to prevent uneven delivery, and be made of iron in preference to wood to prevent warping. Their speed, which should be uniform, determines the turn-off, about 25 to 28 lb. per hour being the average capacity of a Botany carder. The function of the licker-in is to separate the fibres, but it must not be supposed that this is perfectly accomplished at this stage. Distributed over its surface are small tufts of partially opened wool, which have to be treated by the succeeding rollers. It is sometimes steam-heated in order to cause the wool to work freely and more readily.

The licker-in and feed rollers have been dealt with somewhat lengthily because of their important functions. The other lickers-in with the dividers have to deal with the staples and matted portions that have escaped the action of the previous rollers. To accomplish this their

speed is increased as the wool passes on and becomes more free and open. The clothing being made progressively finer, also brings the individual fibres within the sphere of action. These rollers, being engaged essentially in opening the material, should be made rather keener than the finishing end of the card.

After passing these preparatory rollers the work of opening and separating is still carried on, another feature, viz: the mixing of the fibres, being combined with the opening. The *swift*, with its complement of rollers, performs this double duty. From what has been said with regard to the first licker-in removing the longest fibres first and the shortest afterwards, together with the breakage which must occur, it is easy to see that unless some rearrangement is effected, serious irregularities will be apparent in the carded sliver. The *swift* is the largest roller in the series, and, with the exception of the fancy, has the greatest velocity. It acts in the first instance as a carrier to convey the wool from the opening to the *workers* or mixing rollers. Bearing the fibres on its surface, it takes them forward to the first worker; and working, as they do, point to point, and the speed of the swift being something like fifty or sixty times greater than the worker, the wool is lashed into its teeth, thus getting both opened and combed. The difference in their relative speed causes the worker to receive a large deposit from the swift as it rushes past. This, of course, ensures a thorough mixture of the fibres from a large area, and as the accumulation is carried round it is removed by the stripper and given up again to the swift.

If the wool is not sufficiently open to pass the worker, it is engaged and taken round again, this action being repeated until it can get past. These rollers being successively set nearer to the swift, the opening is consequently done in stages. The *workers* should be as large as convenient, so as to bring the maximum number

of wires into contact, which results in better working. Owing to its greater power, the swift has sometimes a tendency to force the teeth of the workers, to counter act; in which case they might with advantage be made slightly keener, but care must be taken to guard against having this too excessive, otherwise the difficulty of stripping will be materially increased. It must not be assumed that each worker in turn clears the swift, since, being set a short distance off, only the wool which projects sufficiently to reach their teeth is dealt with; consequently, while one particular staple may be engaged by all the workers on the swift, it does not follow that this occurs with every one, since the shortest, for example, may only be taken up at the last worker. For good carding the teeth of these rollers must be kept in perfect point, the clothing, too, should approximate closely to that of the swift, and would be no worse if a shade finer.

The *strippers* are small but nevertheless important rollers. Their function, as indicated, is to remove the wool from the worker and deliver it to the swift. Running point to smooth side of worker their surface speed must necessarily be greater to enable them to unhook the wool, while at the same time they must be slower than the swift, whose part function is to clear the strippers and carry the material again forward into contact with the workers. The wires should be fairly strong and kept in good condition to ensure thoroughly clean stripping, for if the wool is left on the worker it gets driven further into the teeth when passing the cylinder, and so fills them up. When this occurs, in addition to augmenting the amount of waste it detracts from their efficiency.

The combined action of the lickers-in, swift and workers has so completely opened the wool that after it has passed the last worker the individual fibres are more or less embedded between the wires of the swift, and if they are to be removed they must in the first instance be

lifted on to the surface. For this purpose a special roller, the *fancy*, is employed. The setting and proper arrangement of this roller is of vital importance to successful carding. Its peculiar position and function cause it at times to be especially troublesome. Its duty is different from that of every other roller, neither being engaged in working or stripping the wool, but raising it in the teeth of the swift in order that the doffer may subsequently receive it. In this case, therefore, conditions different from those adopted in the other portions of the machine are requisite. The teeth, instead of being short and somewhat rigid, capable of holding the material, must be long and flexible, partaking more of the character of a brush. Moreover, since they have to work into the swift, rigid teeth would undoubtedly damage its wires.

To ensure the requisite elasticity, various forms of teeth have been devised. Some of these are shown at Fig. 71, where A gives the straight tooth without bend at all. B is the ordinary form of card tooth, but it will be observed the knee is much nearer the base than in ordinary cards. C is a patent double bend tooth made by Messrs. J. Thompson & Co., Kendal, who set them in a leather foundation. Which is the best form to employ is a matter upon which opinions vary. Experience teaches that the straight tooth is too elastic for ordinary purposes, though this may be modified by increasing the thickness of the foundation. In this form of tooth all the spring has to be got out of the foundation, and this is not advisable. The double bent wire acts very well, and ought to be largely adopted. While it is sufficiently elastic to raise the fibres, it is not too soft, the requisite spring being got out of the wire itself and not from the foundation, as in the others.

The proper management of the fancy is not always an easy matter. Sometimes, instead of brushing up the wool, it has a tendency to " lap " or remove it from the

swift. When this occurs, not only does it prevent the fancy from performing its duty, but it also produces an uneven sliver. If a careful examination of the driving arrangements be made, it will be generally found that this is caused by the belt slipping, and consequently reducing the speed of the fancy below that of the swift. Their normal relations are destroyed, and instead of acting as a brush it is transformed into a working roller, because the teeth are running point to point, whereas

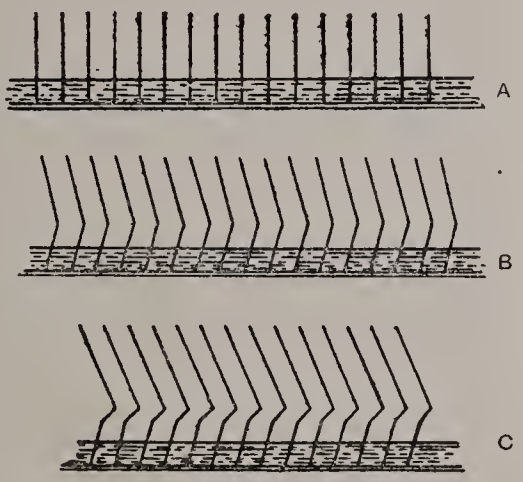

Fig. 71.

they ought to be smooth to smooth side. The remedy therefore, is obvious; attention to the strap is all that is necessary, and invariably remedies the defect. While it is essential that the speed of the fancy must be greater than the swift, it must not be too excessive, or another troublesome tendency equally as detrimental will have to be dealt with—viz., the "throwing of the wool." When running too quickly, instead of raising the fibres in the teeth, it brushes them out, causing them to fly all over the machinery. There are, however, other agencies which produce throwing—viz., bad setting, teeth too rigid, and clothing too full of teeth. If the flexible teeth

of the fancy which work into those of the swift are set too deep, then the amount of displacement which occurs when they enter the swift is such that when released the rebound is sufficient to bring out the fibres as well. The depth to which they are set will depend upon the nature of the wool in use, but, generally speaking, about one-eighth of an inch will be found enough for most purposes. It is advisable to have a few wires rather longer than the rest, so as to work deeper, in order to prevent any accumulation of short fibres in the bottom of the teeth. When too rigid, instead of acting as a brush they partake more of the character of a rake, and comb the wool out of the swift, while the wear and tear of the wire is also much increased. If over-full of wire, then instead of lifting the wool it presses it farther into the swift, and so defeats its object.

It will be seen that a variety of factors influences the working of the fancy, and whatever care is exercised it is generally found to throw the shortest fibres out, due to the speed required to raise the longest sufficiently; to keep these within bounds most fancies are covered over with guards. If the wool be not raised enough it may generally be attributed to one of two causes—either the teeth are too short and stumpy, or they are set too shallow. When the wires become worn down they should be at once replaced with new clothing to avoid forcing the wool deeper into the swift.

If after leaving the fancy the layer of wool is passed directly on to another swift, with its complement of working rollers, it will be obvious that the already limited number of fibres will become distributed over a much greater area, with more distance intervening between them, consequently much of the carding surface would be out of action through insufficiency of material. To obviate this the *doffer* D (Fig. 60) acts as a collecting roller, running close to the swift, but at a much slower speed. *It receives upon one inch of its surface the deposit*

from several inches of the swift, and being provided with a change-wheel, the speeds may be so regulated that a given thickness is regularly placed on the doffer. The wool is practically piled on the teeth, and unless they are capable of retaining it, passes between the rollers and falls on the floor. To prevent this the teeth must always be kept in good point; frequently a small roller card or emery is placed under the doffer to ensure regular sharpening. The doffer should also be made rather keener than the swift which it follows, so as to increase its retaining power. Its size, too, is a matter of importance, since the amount of the combing received by the wool during its removal is dependent upon the number of wires within working distance, so that in a large doffer there are more so engaged than in a small one.

The *angle stripper* is a small roller whose function is to transfer the wool from the doffer to the cylinder. It sometimes causes trouble by not taking up the fibres, but knocks them off when they fall down between the rollers. Very often this results either from excessive speed or bad condition of the clothing. It must be kept in perfect point, and should be made keener in the tooth than any of the other rollers, so as to ensure clean stripping. When it is running too fast, owing to its small size it has not sufficient time to deal with the wool, and as a result it fails to gather it. To enable it to remove the thick layer brought forward by the doffer, its clothing requires to be coarse, open and strong, or it will have a tendency to bend back too much under the strain put on it.

168. Grinding. The primary object of grinding is to reduce to, and maintain at one uniform length, all the card wires and to keep them in good point. When a card roller has been newly covered, the points of the teeth need to be sharpened before being put into use, as, up to this point, they have been simply cut off by the setting machine. To do this they are taken to

the grinding frame, which consists of a roller covered with emery, either coarse or fine, according to the work to be done. This roller rotates in close contact with the card clothing of each respective cylinder. The large cylinders such as swifts and doffers are ground in their normal position on the card frame; the workers, strippers and all the small rollers are detached and taken to the grinding frame, where they are placed one on each side of the emery roller so as to sharpen two cylinders at once. The emery roller has a lateral as well as a rotating motion so as to avoid grinding the card clothing in strips. The production of a *needle* point is generally ideal because of its retentive properties on the wool.

No one will question the superiority of the needle point; but since this is practically unattainable, the best substitute has to be obtained. What is required is a point that will readily penetrate between the fibres and travel along them without injuring their surface, and it follows that the finer and smoother it can be made, the better it will accomplish its duties, since the aim should be to treat each fibre separately if possible. In grinding it is necessary to guard against pressing the emery roller too hard upon the wires or there is danger of bending or barbing them. When this happens they retain the fibres, so that they are not easily detached, and many get broken. Indifferent slivers invariably result from hooked wires, and it is idle to look for a web free from lumps when the wires cannot pass freely through the wool.

The necessity for frequent grinding arises chiefly through faulty setting. When properly arranged the different rollers should to a large extent keep each other in good point. For example, the fancy sharpens the swift, the strippers polish the workers, and the angle stripper, the doffer.

There is no doubt that grinding is often much overdone, and a great deal might be said both for and against it. With proper care rollers have been known to run for over three years without being touched. Grinding is, to say the least, very wasteful, and occasions more wear of the wires than the actual work they have to do. The emery used should not be too fine, or it will not get between the wires to grind the sides; on the other hand, if too coarse it will cause too much abrasion and leave the surface full of scratches, which strip the fibre, as is seen by the amount of fine white dust which abounds on every part of the rollers when newly ground. After grinding it would be very beneficial to polish the teeth with a wire brush having long flexible teeth, for in this way the rough surface is removed and a better working tooth is the result. The cylinder and doffer should be made to rotate slowly during the operation of sharpening, as by this means it is found that the best results are obtained.

If the card is to do its work effectually, it is necessary to free the teeth from the short fibres, neps, or motes which accumulate between them. Success depends upon the tooth being as free as possible, but if it is surrounded by a mass of short waste its freedom will be much reduced. The various rollers, therefore, require periodically cleaning, or, as it is termed, stripping. The interval which must elapse between its repetition depends upon the nature of the material; short, weak, faulty wool will fill up the wire more quickly than when the staples are strong and of good length. About twice a week will generally suffice for ordinary purposes.

INDEX.

	Page
Alkaline Scouring ...	146
Alpaca	92
Altitude, Influence of ...	27
Analysis of Soap ...	112
,, of Wool ...	39
Automatic Feed ...	233
Burrs and Burring ...	222
Burring Machine ...	223
,, ,, Accessories	223
,, Operation ...	224
Carbonising	226
Carbonising, Process of...	227
Carding, See Worsted Carding	
Chemical Reactions ...	40–44
Classification of Wool ...	89
Classification of Sheep ...	3
Climate, Influence of ...	19
Contour, Influence of ...	27
Cots or Matted Wool ...	220
Detergents	109
Drying tests	153–5
Fallers, Function of ...	178
Felting	86
Felting and Fibre structure	70
Felting and Kempy Fibres	74
Felting and Medulla Cells	75
Felting and Yarn characteristics	77
Felting Examples ...	83
Felting properties of Wool Fibres	66
Felting retardation and thickening of Cell Walls	73
Fibre, Cells	46–47
Fibre, difference of, in same Fleece ...	103
Fibre, relation of Secretive Glands to ...	32
Fibre, Structure of the...	51
Fibre, Wool	46
Fibres, Kempy ...	48
Fibres, Length and Fineness of Wool ...	57
Fleece, Difference of Fibre in same	103
Fleece, Qualities in a ...	97
Fleece, Sorted ...	99
Fleece, Spinning capacities	100
Gauge Point	183
Gilling, Calculations on turn off	195
Gilling, Double Screws ...	200
Gilling, Double Screws, details	201
Gilling, Double Thread Screws	199
Gilling, Drafts, ... 180,	191
Gilling Drafts, Calculations 183–191,	204–207
Gilling, Expanding Screws	199
Gilling, Fluted Rollers ...	196
Gilling Machine 173–	177
Gilling, Process of ...	176
Glands, Secretive, Relation to Fibre ...	32
Goat, Mohair	10
Impurities, Added ...	36
Impurities, Foreign ...	30
Impurities in Wool ...	29
Impurities, Natural ...	30
Impurities, Percentage of	29
Impurities, Removal of	36
Influence of Altitude ...	27
Influence of Chemical reagents, ...	40–44
Influence, of Contour ...	27
Influence, of Pasture ...	25

	PAGE
Influence, of Rainfall ...	22
Influence, of Soil ...	25
Influence, of Temperature	19
Kempy fibres ...	48
Kempy fibres and Felting	74
Knocker-off ...	193
Length, Wool fibres ...	56
Mohair	92
Moisture, and Felting ...	68
Moisture, in Wool ...	59
Moisture, Influence on Cellular Structure ...	59
Oiling Mechanisms ...	214
Oiling Wool	210
Oil, Emulsions ...	212
Oil, Gallipoli	211
Oil, Oeline	212
Oil, Standard allowance of	217
Oils, Suitable	211
Pasture, Influence of ...	25
Rainfall, Humidity a modifier of ...	24
Re-agents, Action of Chemical	39
Scouring, Alkaline ...	146
Scouring Machines, Petrie's Rake	134
Scouring Machines, Petrie's Harrow	141
Scouring Machines, Petrie's and McNaught's Automatic Self-Cleaning ...	144
Scouring Solution, Temperature of ...	114
Scouring, Wool ...	107
Sheep, African ...	8
Sheep, Australian ...	6
Sheep, British ...	4
Sheep, Classification of	3
Sheep, Distribution of ...	2
Sheep, Indian... ...	10
Sheep, New Zealand ...	8
Sheep, Origin of domestic varieties ...	1
Sheep, South American	10
Soap recipes	111
Soda, Action of ...	111
Soil, Influence of ...	25
Solvents, Volatile ...	147
Spinning Properties, different wools ..	57
Squeezing Rollers, Pressure of same 124 and	139
Suint and de-suinting ...	106
Twaddle Degrees ...	226
Washing Machinery ...	116
McNaught's Harrow Type	119
McNaught's Swing rake	123
Washing, Object of Wool	105
Water and its impurities	107
Wool, Analysis of ...	39
Wool, Altitude and Contour	27
Wool Auctions ...	14
Wool Baled, for transport and storage ...	14
Wool, Botany, ...	13
Wool, Conditions of Sale	15
Wool, Crossbred ...	13
Wool, Distinguishing Marks	12
Wool Drying	151
Wool Drying tests, ...	153–7
Wool Drying Machines	
Hydro-Extractor ...	155
Table Dryer ...	156
Petrie's and McNaught's	157–161
The Textile Conveyor	162–166

	PAGE
Wool, English, Scotch, Welsh, Irish ...	93–94
Wool, Fallen	13
Wool fibre	46
Wool fibre cells ...	47
Wool, Felting Properties of	66
Wool, Greasy ...	13
Wool, Impurities in ...	29
Wool, Influence of Climate on...	19
Wool, Lustre of ...	13
Wool, Moisture in ...	59
Wool opening process ...	222
Wool, Origin	1
Wool, Pulled	13
Wool, Rainfall and its influence on ...	22
Wool, Rainfall, Humidity a modifier of ...	24
Wool, Relative value of	17
Wool, Scoured ...	13
Wool Scouring ...	107
Wool Scouring Machines	117
Wool, Slipe	13
Wool, Soil and Pasture, influence on ...	25
Wool Sorting	97
Wool, Spinning properties of	57
Wool, Suitability for specific cloths ...	18
Wool, Influence of Temperature on ...	20
Wool, Washed ...	13
Wool Washing Machines	116
Wool Washing, Object of	105
Wools, Classification of...	89
Wools, Natural Coloured	92
Woollen and Worsted Yarns, a comparison	167
Woollen and Worsted Yarns Differences of manipulation of wool ...	170
Woollen and Worsted Yarns Illustrated differences of	171
Woollen and Worsted Yarns Structural differences	168
Woollen and Worsted Yarns Suitable Wools for ...	167
Worsted Carding, Short wool 219 and	229
Worsted Carding, Card Wires	244
Worsted Carding, Clothing Calculations ...	247
Worsted Carding, Clothing and Foundations	243–251
Worsted Carding, Details	230
Worsted Carding, Driving Rollers	236
Worsted Carding, Functions of Card Rollers	259
Worsted Carding, Grinding	265
Worsted Carding, Neps, lumps or motes ...	252
Worsted Carding, Principle of	239
Worsted Carding, Properties of different wires	245
Worsted Carding, Relative speeds of rollers ...	258
Worsted Carding, Setting the rollers	255
Worsted Carding, Setting Wires in clothing ...	246
Worsted Carding, Sizes of rollers	235
Worsted Carding, Speed Calculations ...	239
Worsteds, Preparation of long Wools ...	172
Yarns, Dry spun ...	217
Yolk, Chemical composition of	33

BOOKS PUBLISHED BY F. KING & SONS Ltd.

WHAT IS PSYCHOLOGY? By Rev. S. G. McLELLAN.
1/6 nett. Post Free 1/8

HISTORY OF RISHWORTH SCHOOL
5/- nett By J. H. PRIESTLEY Post Free 5/4

PHOTOGRAPHY IN PRINCIPLE AND PRACTICE
By S. E. BOTTOMLEY, F.R.P.S.
Price 3/6 nett Post Free, 3/10

CARDBOARD MODELLING
(SWEDISH SYSTEM)
Containing the whole of the Swedish Models, with the addition of the Geometrical Forms.
Price 2/6 nett By G. C. HEWITT Post Free, 2/9

CARTON WORK By G. C. HEWITT
A Graduated Course of Modelling in Paper.
Price 2/- Suitable for Standards I, II, III. Post Free, 2/3

WOOD-CARVING By G. C. HEWITT
For Day Schools, Evening Classes and the Home
Price 2/- Post Free, 2/3

F. KING & SONS, LTD., PUBLISHERS, HALIFAX, ENGLAND,
OR ANY BOOKSELLERS.

PRINTED BY
F. KING AND SONS LIMITED,
HALIFAX, ENGLAND

Date Due

Library Bureau Cat. no. 1137.3

QD-B992
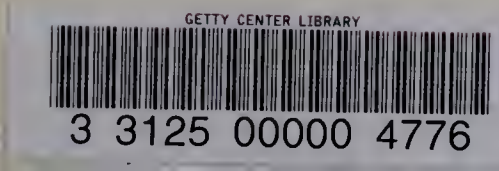
677 B722
102014
Worsted
677 B722
vol. 1